SAMSUNG CONFIDENTIAL
THIS DOCUMENT CONTAINS CONFIDENTIAL
AND PROPRIETARY INFORMATION OF
SAMSUNG ELECTRONICS CO'S PROPERTY.
DO NOT DISCLOSE TO OR DUPLICATE FOR OTHERS
EXCEPT AS AUTHORIZED BY SAMSUNG.

SM-A105F REV01

2019.01.29

sheet01 : MAIN RF
sheet02 : TRANCEIVER, DRX, APT
sheet03 : GPS, BT/WIFI, FM
sheet03 : AP
sheet05 : PMIC(Main,IF), eMMC, IF Conn, KEY, MOTOR
sheet06 : Audio, SD/SIM
sheet07 : CAMERA, DISPLAY, SHEILD CAN,SENSOR

Samsung Confidential

SAMSUNG CONFIDENTIAL
THIS DOCUMENT CONTAINS CONFIDENTIAL PROPRIETARY INFORMATION THAT IS SAMSUNG ELECTRONICS CO'S PROPERTY. DO NOT DISCLOSE TO OR DUPLICATE FOR OTHERS EXCEPT AS AUTHORIZED BY SAMSUNG.

RF MAIN

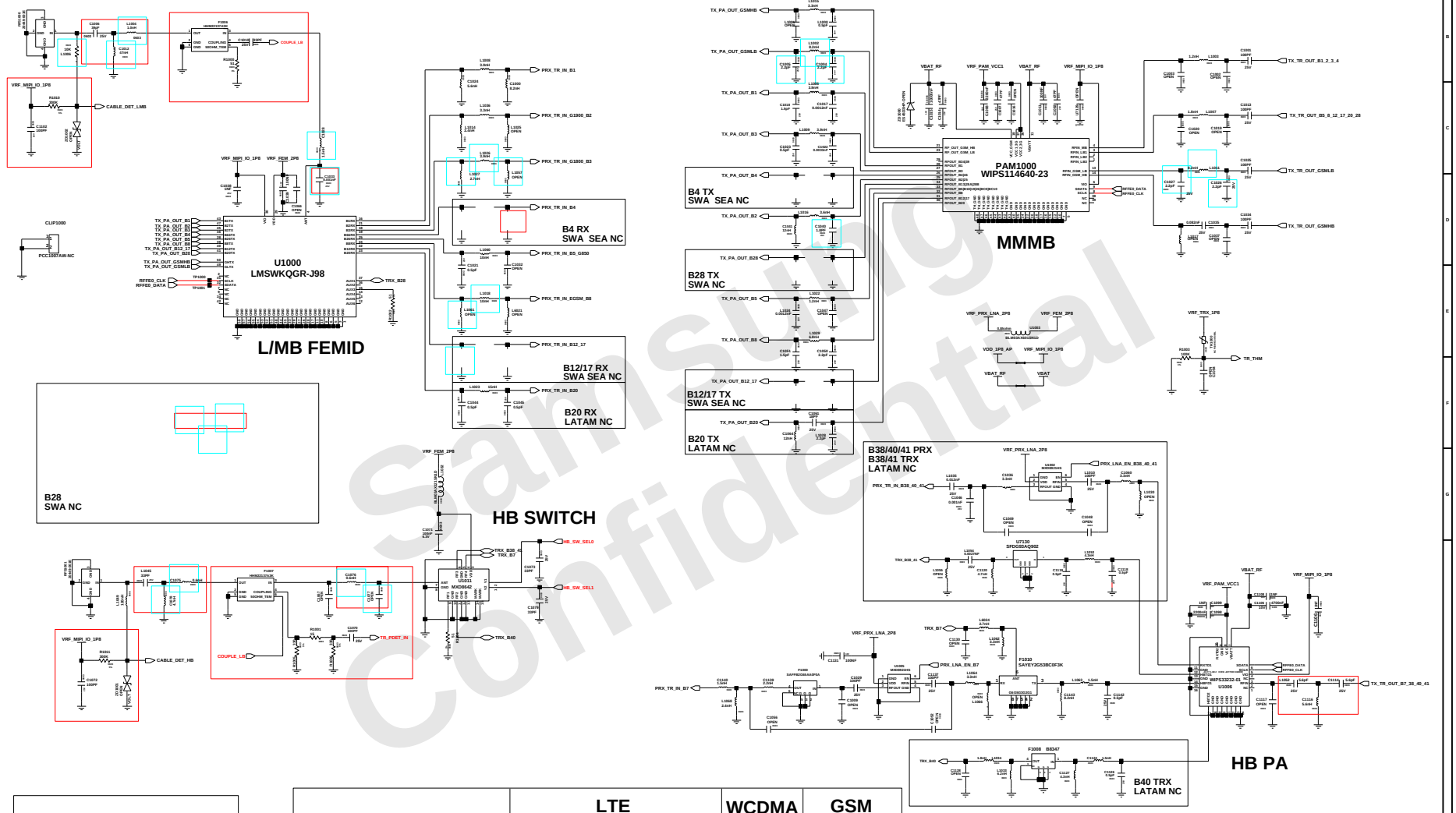

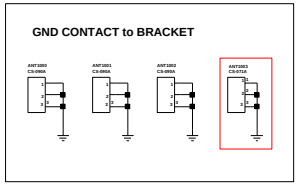

	LTE	WCDMA	GSM
SWA / CIS / MENA / AFR	B1/2/3/5/7/8/20/38/40/41	B1/2/5/8	QUAD
SEA	B1/3/5/7/8/20/28/38/40/41	B1/2/5/8	QUAD
LATAM	B1/2/3/4/5/7/8/12/17/28	B1/2/4/5/8	QUAD
KOR	B1/3/4/5/7/8/17/20/28/38/40/41	B1/2/4/5	QUAD

Engineer	MAIN RF
Drawn by:	
RED CHK:	TITLE: SM-A105F
DOC CTRL CHK:	Size: A4
MFG ENGR CHK:	
Changed by: / Date Changed: / Time Changed: / QA CHK:	Drawing Number 1/7

Samsung Confidential

user|swcad71|10.252.50.122|20190222-135048

SAMSUNG CONFIDENTIAL
THIS DOCUMENT CONTAINS CONFIDENTIAL PROPRIETARY INFORMATION THAT IS SAMSUNG ELECTRONICS CO'S PROPERTY. DO NOT DISCLOSE TO OR DUPLICATE FOR OTHERS EXCEPT AS AUTHORIZED BY SAMSUNG.

DRX

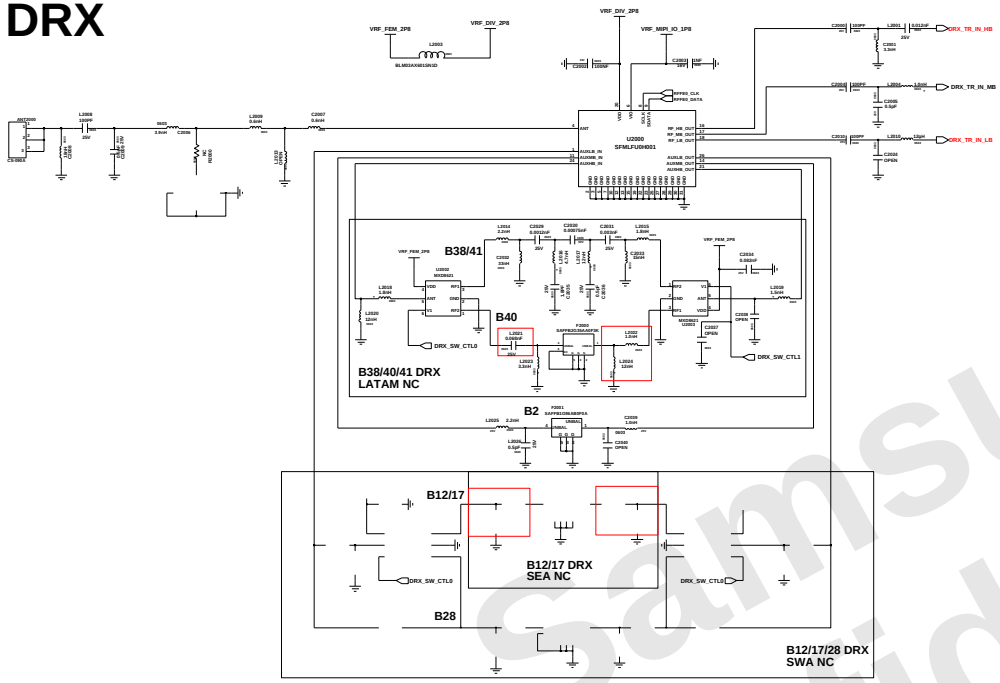

TRANSCEIVER nCA

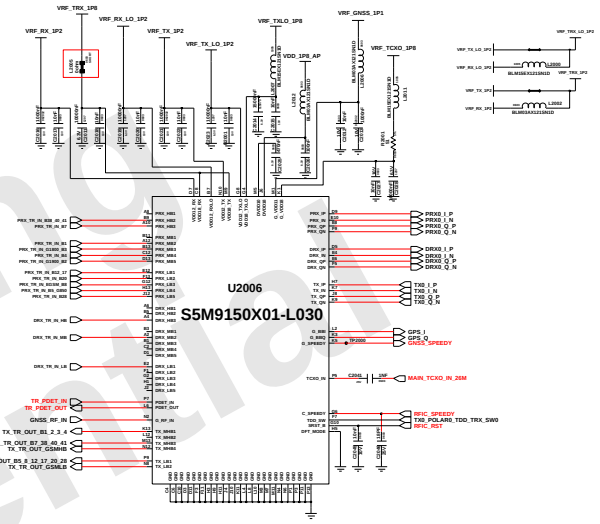

DRX GND SWITCH

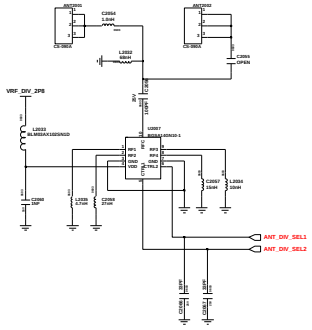

APT MODULATOR

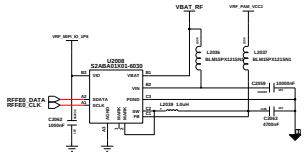

TCXO

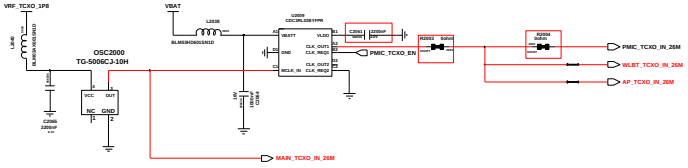

Engineer	DRX, TRANCEIVER
Drawn by:	
R&D CHK:	TITLE: SM-A105F
DOC CTRL CHK:	
MFG ENGR CHK:	
Changed by:	Date Changed:
Time Changed:	QA CHK:
Drawing Number	207

Samsung Confidential

user|swcad71|10.252.50.122|20190222-135049

SAMSUNG CONFIDENTIAL
THIS DOCUMENT CONTAINS CONFIDENTIAL
PROPRIETARY INFORMATION THAT IS
SAMSUNG ELECTRONICS CO'S PROPERTY.
DO NOT DISCLOSE TO OR DUPLICATE FOR OTHERS
EXCEPT AS AUTHORIZED BY SAMSUNG.

GNSS

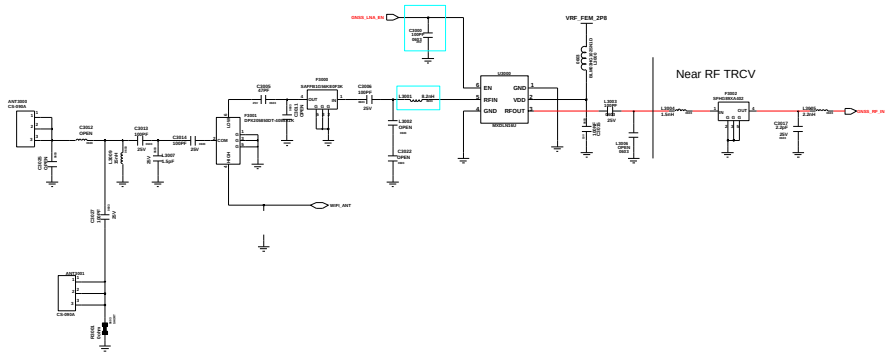

BT/WIFI

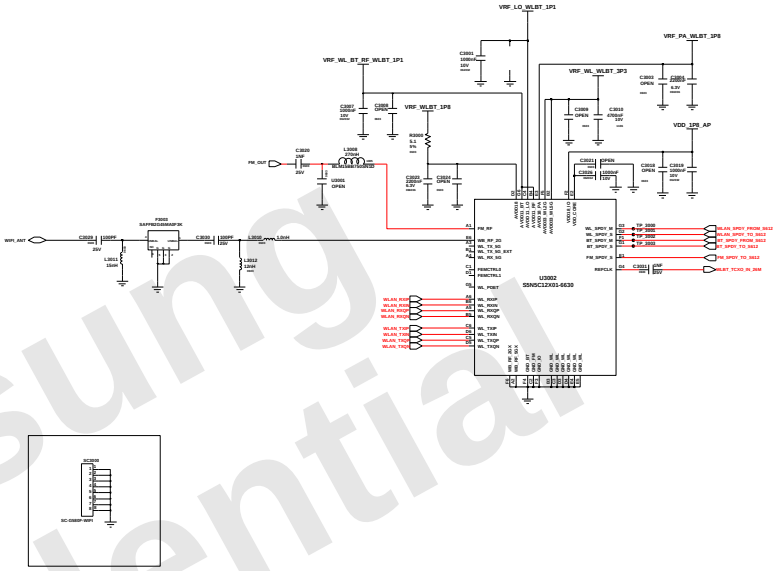

Samsung Confidential

Engineer:	WIFI/BT/GPS
Drawn by:	
Field Chk:	TITLE: SM-A105F
DOC. CTRL Chk:	
MFG Engr Chk:	
Changed by: user03	Date Changed:
Time Changed:	QA Chk:
REV:	Drawing Number:
Page: 97	

SAMSUNG CONFIDENTIAL
THIS DOCUMENT CONTAINS CONFIDENTIAL
PROPRIETARY INFORMATION THAT IS
SAMSUNG ELECTRONICS CO.'S PROPERTY
DO NOT SPECIFIC TO DISCLOSURE THIS DOCUMENT
EXCEPT AS AUTHORIZED BY SAMSUNG.

Lassen P +

POP LP4 2G : SEC 1105-002944
POP LP4 3G : SEC 1105-002962

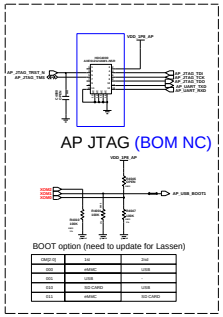

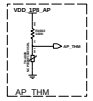

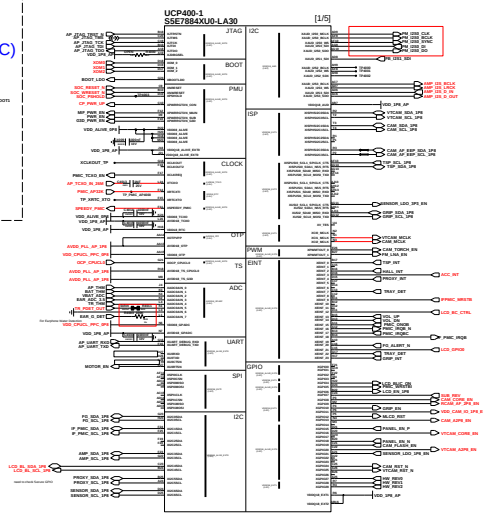

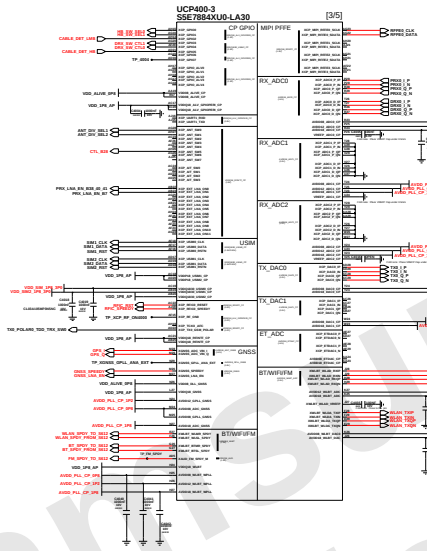

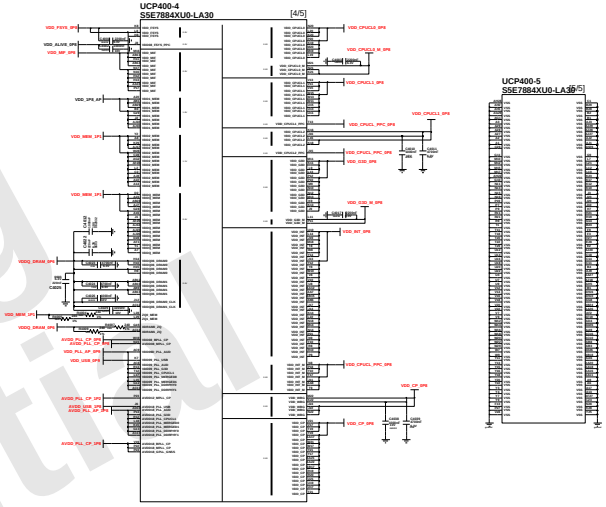

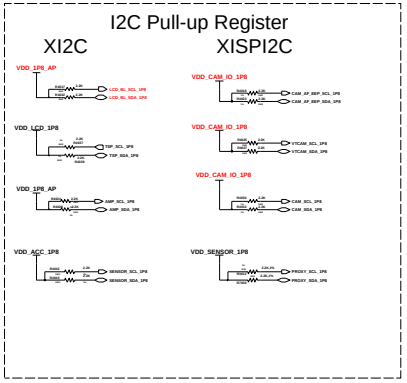

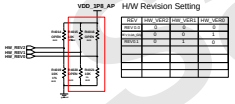

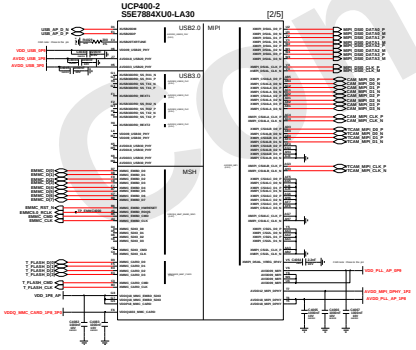

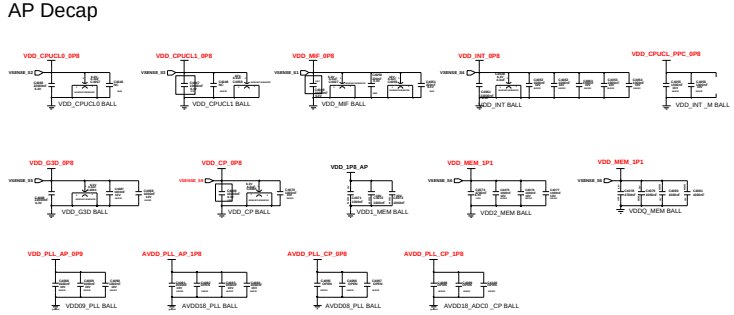

Samsung Confidential

AP	
SM-A105F	

user|swcad71|10.252.50.122|20190222-135051

SAMSUNG CONFIDENTIAL
THIS DOCUMENT CONTAINS CONFIDENTIAL
PROPRIETARY INFORMATION THAT IS
SAMSUNG ELECTRONICS CO.'S PROPERTY.
DO NOT COPY, DISTRIBUTE OR DISCLOSE THIS DOCUMENT
EXCEPT AS AUTHORIZED BY SAMSUNG.

POWER

PMIC

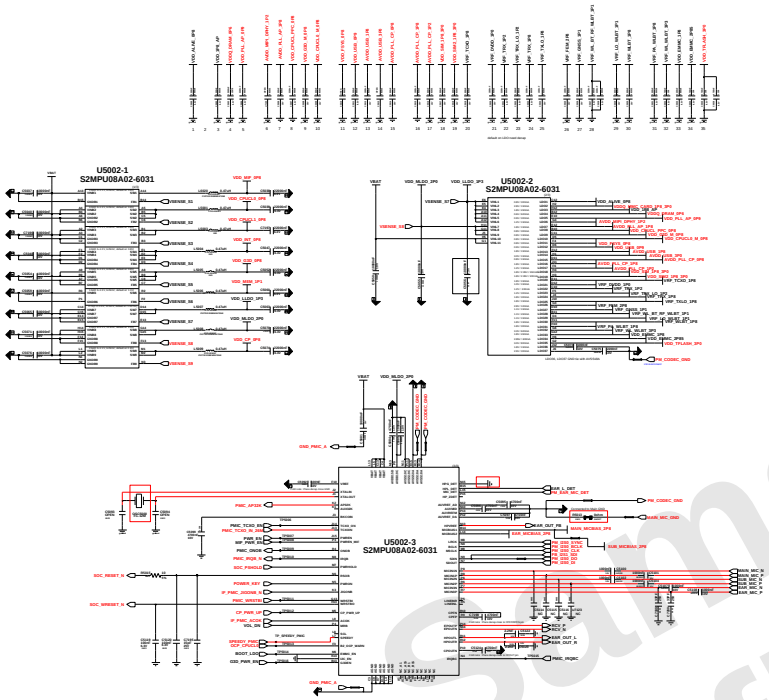

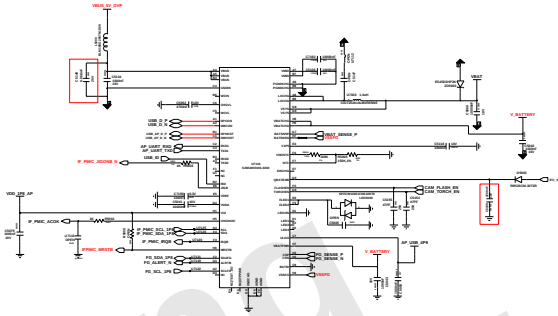

IF PMIC EVT4(CHG+FG+BUCK)

eMMC

16G : SEC (1107-002548)
32G : SEC (1107-002552)

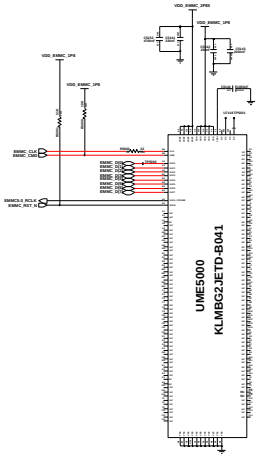

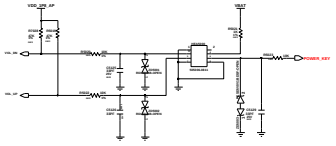

VOLUME KEY POWER KEY

SIM & SD CARD (3IN3)

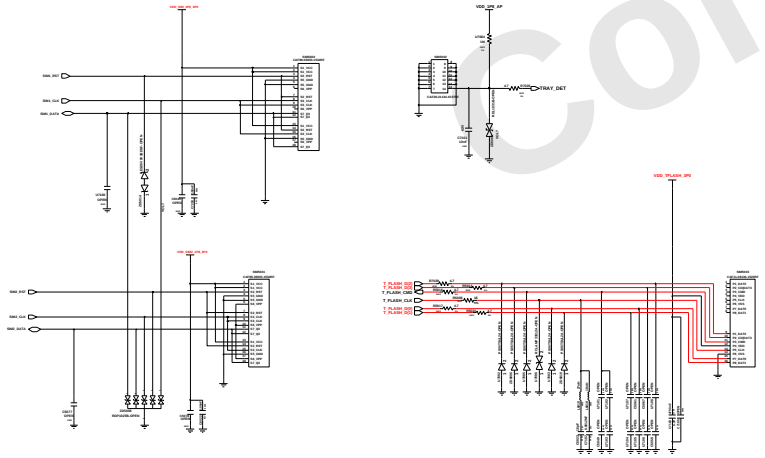

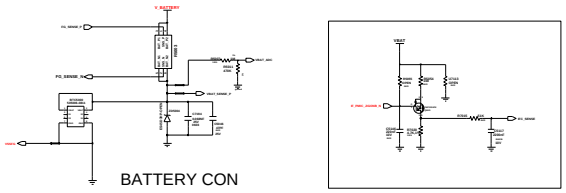

BATTERY CON

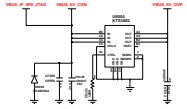

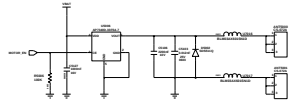

MOTOR

Samsung Confidential

PMIC, eMMC
SM-A105F

user|swcad71|10.252.50.122|20190222-135052

SAMSUNG CONFIDENTIAL
THIS DOCUMENT CONTAINS CONFIDENTIAL
PROPRIETARY INFORMATION THAT IS
SAMSUNG ELECTRONICS CO'S PROPERTY.
DO NOT DISCLOSE TO OR DUPLICATE FOR OTHERS
EXCEPT AS AUTHORIZED BY SAMSUNG.

AUDIO

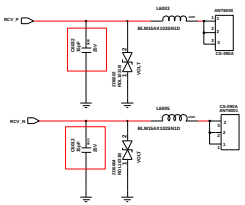

RCV Contact

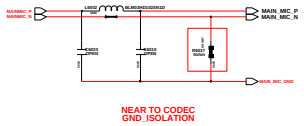

MAIN_MIC

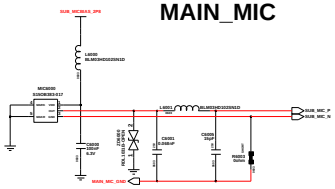

Sub MIC NEAR TO CODEC GND_ISOLATION

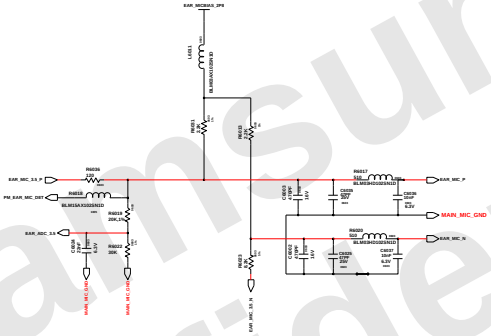

EAR MIC

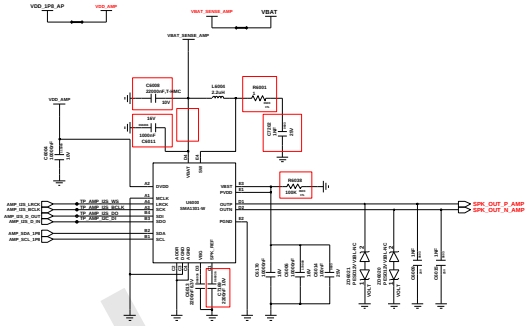

Audio amp

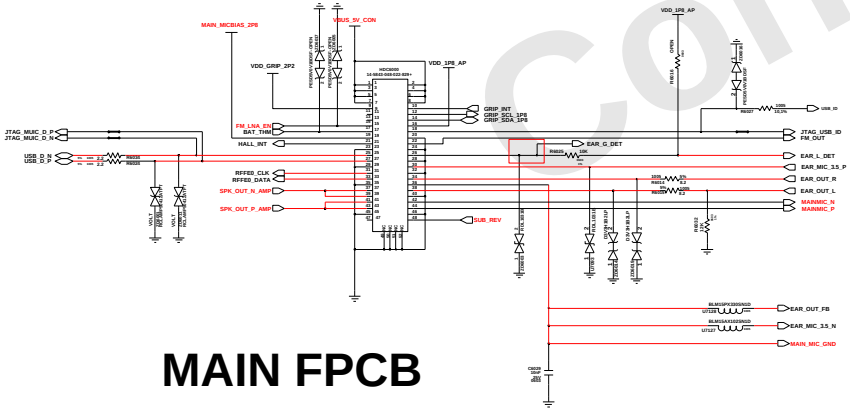

MAIN FPCB

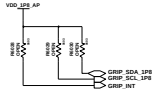

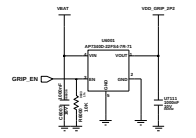

Grip Sensor_LDO

Samsung Confidential

Engineer:		AUDIO	
Drawn by:			
R&D Chk:		TITLE:	Size: A3
DOC CTRL Chk:		SM-A105F	
MFG ENGR Chk:			
Changed by:	Date Changed:	Time Changed:	QA Chk:
REV:	Drawing Number:	Page: 97	

SAMSUNG CONFIDENTIAL
THIS DOCUMENT CONTAINS CONFIDENTIAL AND PROPRIETARY INFORMATION OF SAMSUNG ELECTRONICS CO'S PROPERTY. DO NOT DISCLOSE TO OR DUPLICATE FOR OTHERS EXCEPT AS AUTHORIZED BY SAMSUNG.

CAMERA

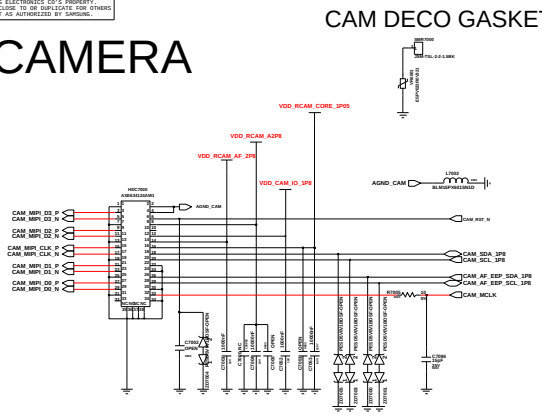

MAIN_CAMERA (13M) : SM-M205F

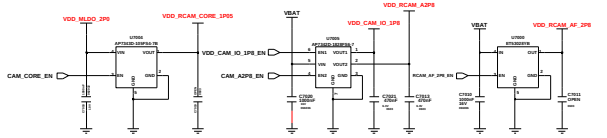

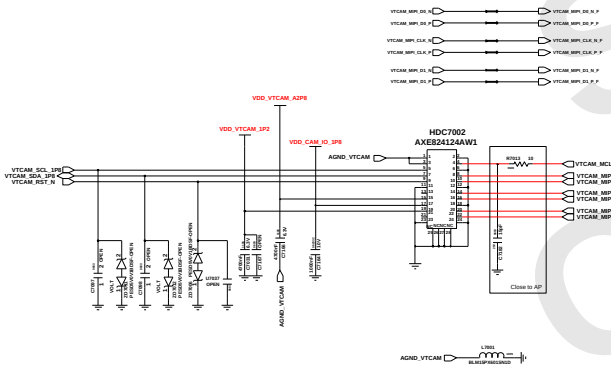

FRONT_CAMERA (5M) : SM-M105F

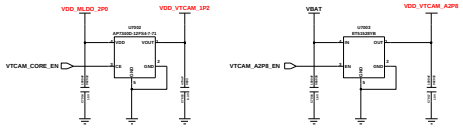

SHIELD CAN

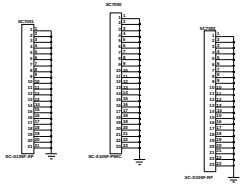

PCB JTAG

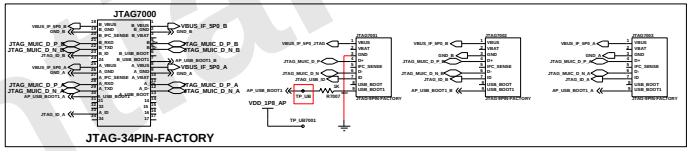

DISPLAY (6.22" INCELL LCD)

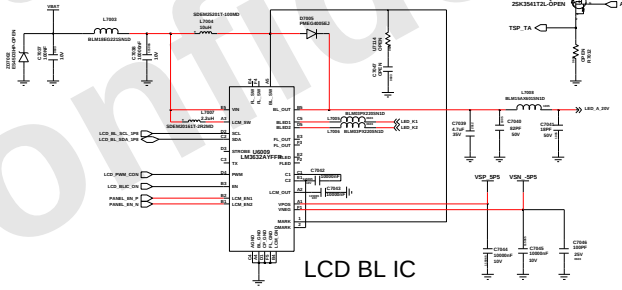

LCD BL IC

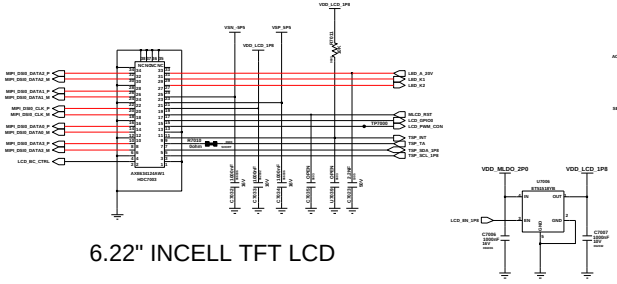

6.22" INCELL TFT LCD

SENSOR

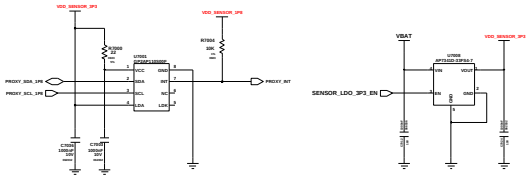

Proxy Sensor

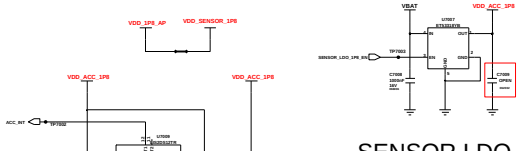

SENSOR LDO

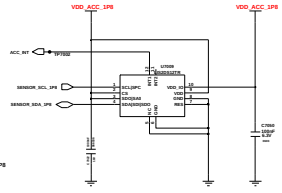

Accel Sensor

Engineer:	CAMERA, DISPLAY,SENSOR
SYSTEM SW:	
HW:	
FIELD CHK:	TITLE:
DOC CTRL CHK:	SM-A105F
MFG ENGR CHK:	
QA CHK:	

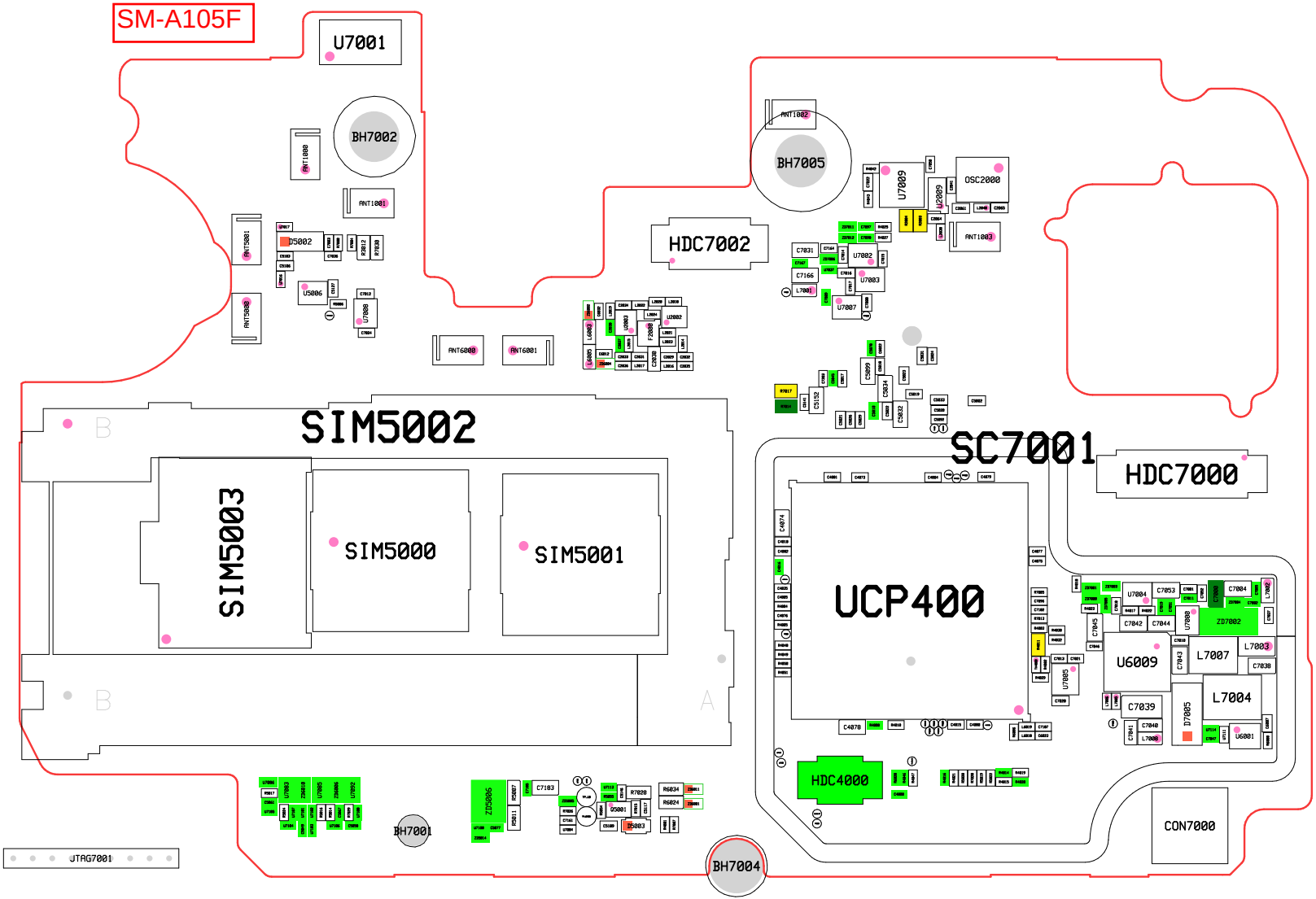
SM-A105F
U7001
BH7002
ANT1000
ANT1001
ANT5001
D5002
R7030
R2012
U5006
ANT5000
U7008
ANT6000
ANT6001
BH7005
ANT1002
U7009
U2009
OSC2000
ANT1003
HDC7002
C7031
C7166
L7001
U7002
U7003
U7007
U2002
F2000
C2030
C5099
C5034
C5152
C5032
SIM5002
SIM5003
SIM5000
SIM5001
SC7001
HDC7000
UCP400
C4074
C4078
U7004
C7053
C7004
C7042
C7044
ZD7002
U7008
U6009
L7007
L7003
C7038
C7043
U7005
C7039
L7004
D7005
C7040
C7041
L7000
U6001
HDC4000
CON7000
ZD5006
C7183
R7020
Q5001
D5003
R6034
R6024
BH7001
BH7004
JTAG7001

SM-A105F

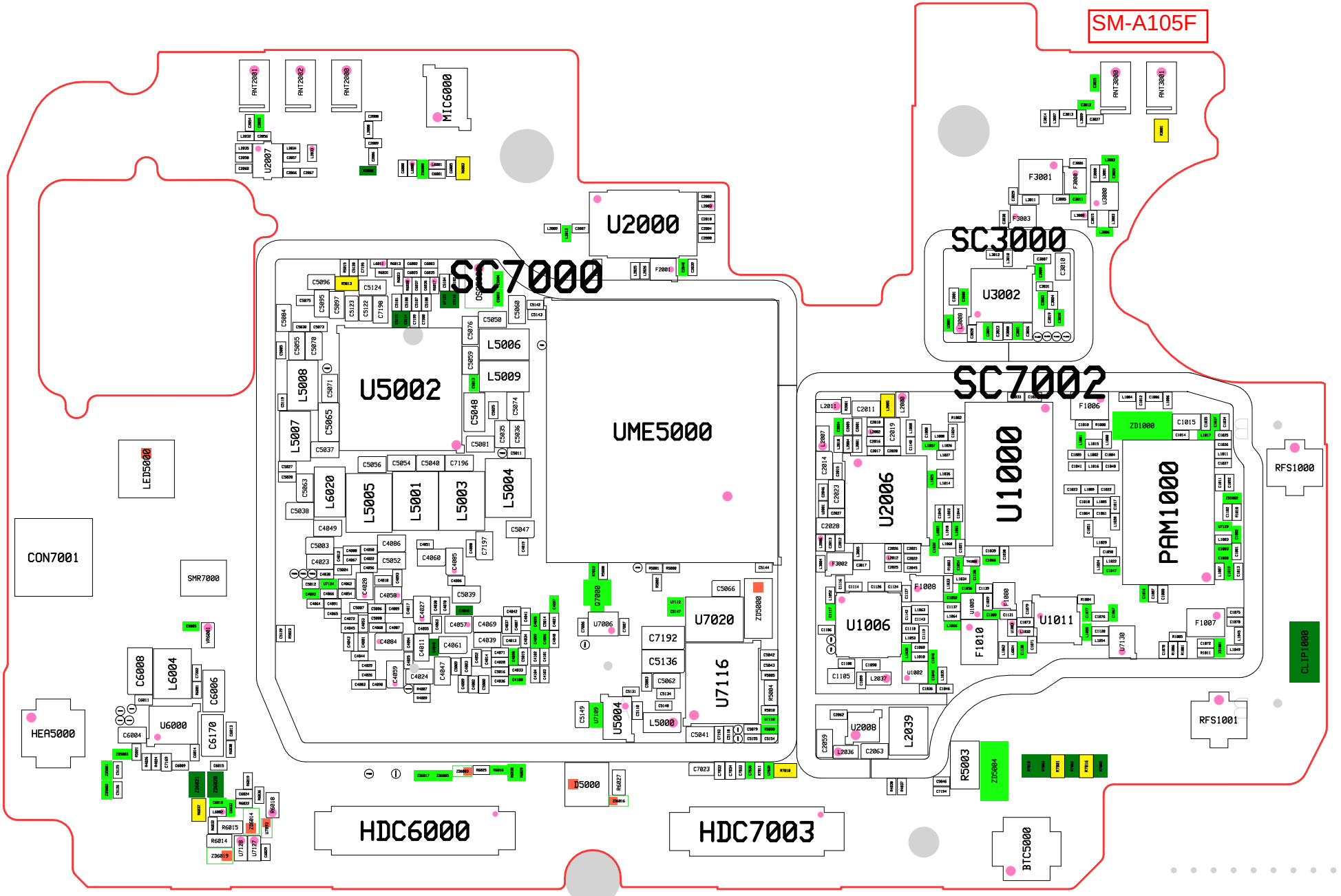
ANT2001
ANT2002
ANT2003
MIC6000
U2007
U2000
SC7000
U5002
UME5000
L5006
L5009
L5008
L5007
L6020
L5005
L5001
L5003
L5004
LED5000
CON7001
SMR7000
C6008
L6004
C6006
U6000
C6170
HEA5000
U7020
U7116
U5004
U7006
U7000
ZD5000
HDC6000
HDC7003
U5000
SC3000
U3002
ANT3000
ANT3001
F3001
SC7002
U2006
U1000
PAM1000
ZD1000
RFS1000
RFS1001
U1006
U1011
F1010
F1008
F1007
F1006
U2008
L2039
R5003
ZD5004
BTC5000
CLIP1000

SAMSUNG CONFIDENTIAL
THIS DOCUMENT CONTAINS CONFIDENTIAL
AND PROPRIETARY INFORMATION OF
SAMSUNG ELECTRONICS CO'S PROPERTY.
DO NOT DISCLOSE TO OR DUPLICATE FOR OTHERS
EXCEPT AS AUTHORIZED BY SAMSUNG.

SM-A105F REV01

2019.01.29

sheet01 : MAIN RF
sheet02 : TRANCEIVER, DRX, APT
sheet03 : GPS, BT/WIFI, FM
sheet03 : AP
sheet05 : PMIC(Main,IF), eMMC, IF Conn, KEY, MOTOR
sheet06 : Audio, SD/SIM
sheet07 : CAMERA, DISPLAY, SHEILD CAN,SENSOR

Samsung Confidential

SAMSUNG CONFIDENTIAL
THIS DOCUMENT CONTAINS CONFIDENTIAL PROPRIETARY INFORMATION THAT IS SAMSUNG ELECTRONICS CO'S PROPERTY. DO NOT DISCLOSE TO OR DUPLICATE FOR OTHERS EXCEPT AS AUTHORIZED BY SAMSUNG.

RF MAIN

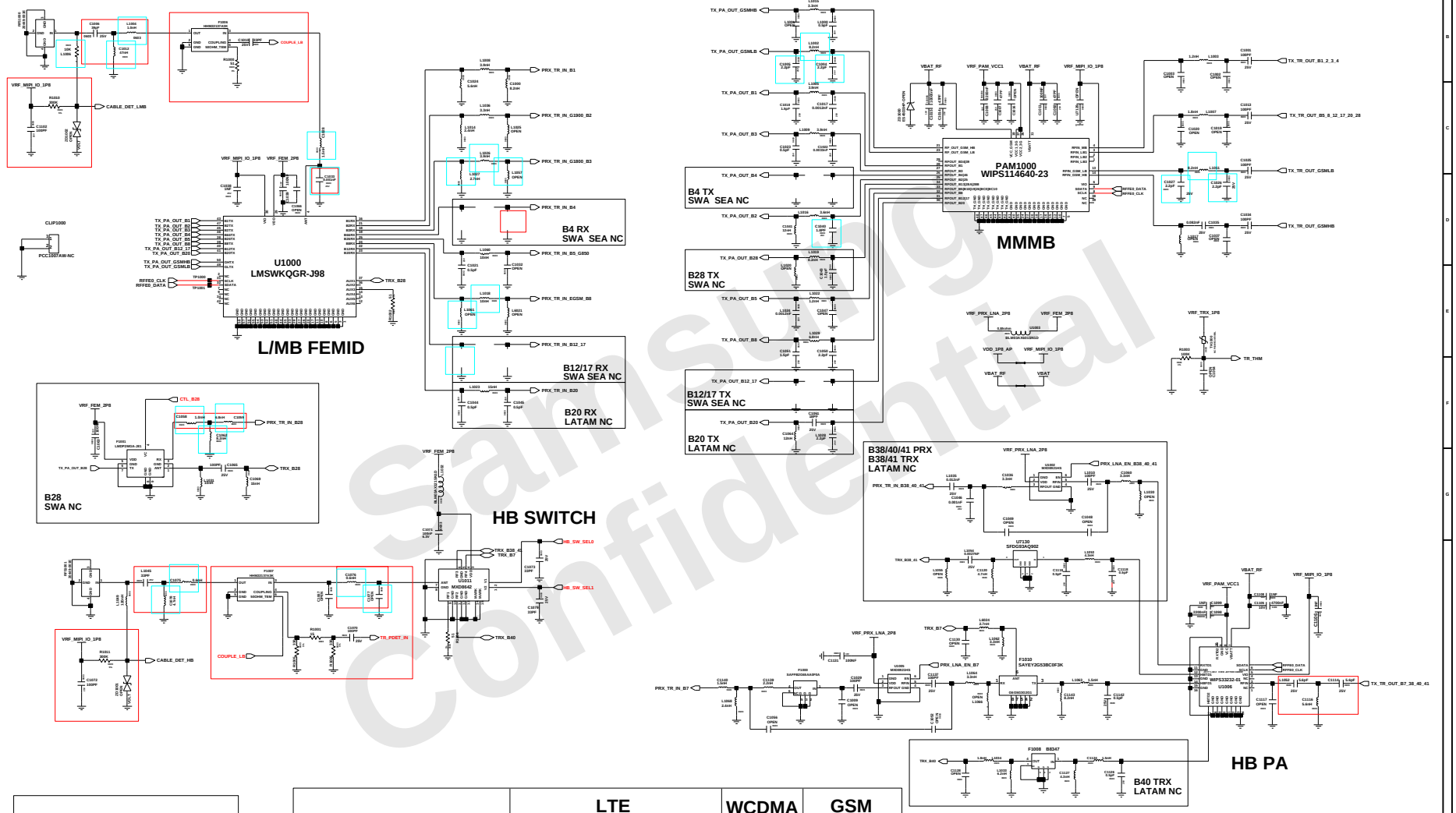

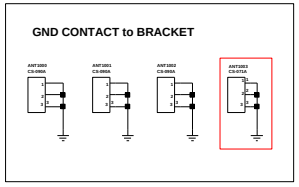

	LTE	WCDMA	GSM
SWA / CIS / MENA / AFR	B1/2/3/5/7/8/20/38/40/41	B1/2/5/8	QUAD
SEA	B1/3/5/7/8/20/28/38/40/41	B1/2/5/8	QUAD
LATAM	B1/2/3/4/5/7/8/12/17/28	B1/2/4/5/8	QUAD
KOR	B1/3/4/5/7/8/17/20/28/38/40/41	B1/2/4/5	QUAD

Engineer	MAIN RF
Drawn by:	
R&D CHK:	TITLE: SM-A105F
DOC CTRL CHK:	
MFG ENGR CHK:	
Changed by:	Date Changed:
Time Changed:	QA CHK:
Drawing Number	1/7

Samsung Confidential

user|swcad71|10.252.50.122|20190222-133929

SAMSUNG CONFIDENTIAL
THIS DOCUMENT CONTAINS CONFIDENTIAL
PROPRIETARY INFORMATION THAT IS
SAMSUNG ELECTRONICS CO'S PROPERTY.
DO NOT DISCLOSE TO OR DUPLICATE FOR OTHERS
EXCEPT AS AUTHORIZED BY SAMSUNG.

DRX

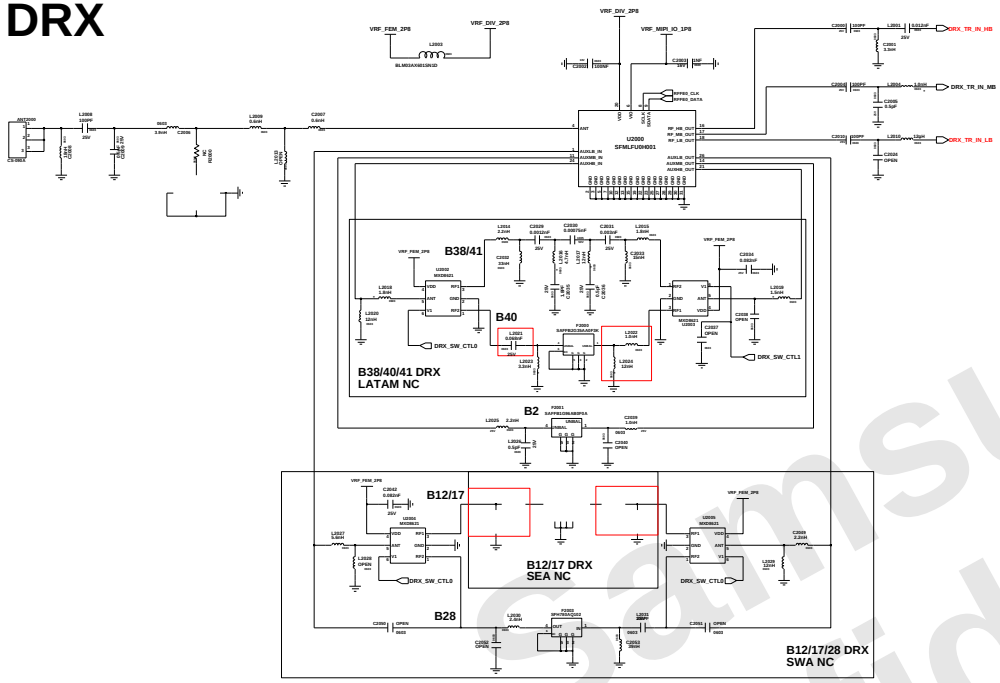

TRANSCEIVER nCA

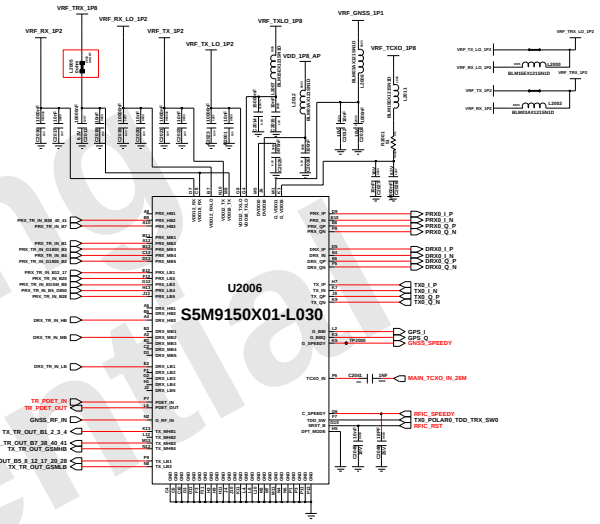

DRX GND SWITCH

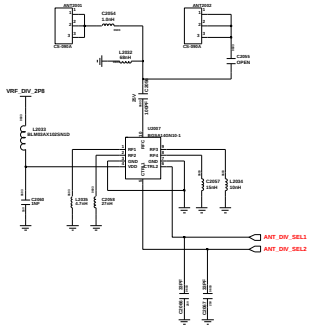

APT MODULATOR

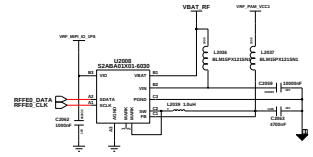

TCXO

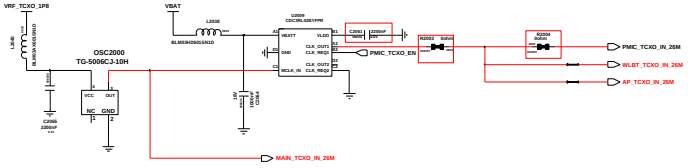

Engineer	DRX, TRANCEIVER
Drawn by:	
R&D CHK:	TITLE: SM-A105F
DOC CTRL CHK:	
MFG ENGR CHK:	
Drawing Number	207

Changed by: | Date Changed: | Time Changed: | QA CHK:

Samsung Confidential

user|swcad71|10.252.50.122|20190222-133930

SAMSUNG CONFIDENTIAL
THIS DOCUMENT CONTAINS CONFIDENTIAL
PROPRIETARY INFORMATION THAT IS
SAMSUNG ELECTRONICS CO'S PROPERTY.
DO NOT DISCLOSE TO OR DUPLICATE FOR OTHERS
EXCEPT AS AUTHORIZED BY SAMSUNG.

GNSS

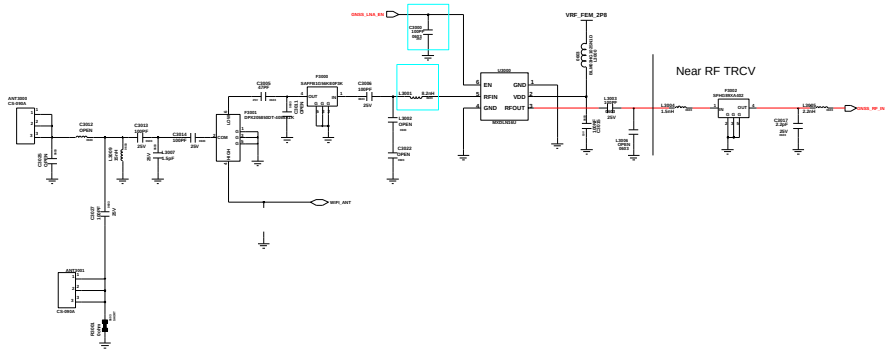

BT/WIFI

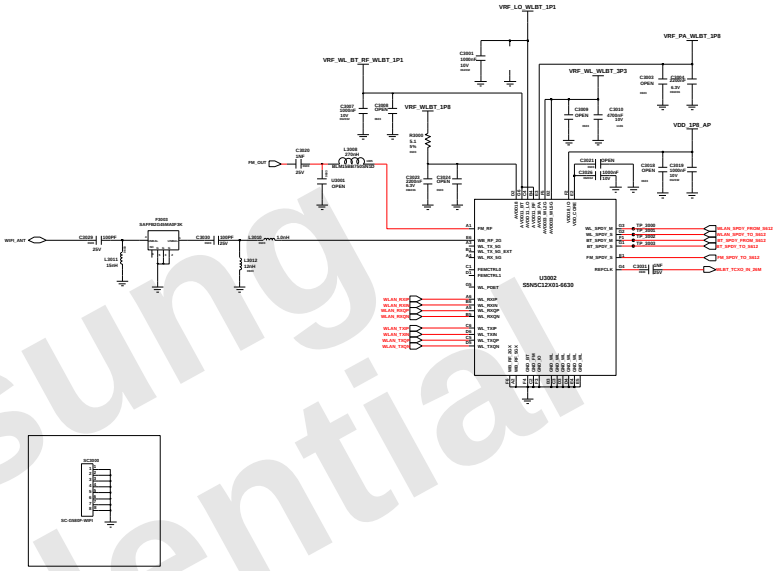

Samsung Confidential

Engineer:			
Drawn by:	WIFI/BT/GPS		
Field Chk:	TITLE: SM-A105F		Scale: A1
DOC CTRL CHK:			
MFG ENGR CHK:			
Changed by: user03	Date Changed:	Time Changed:	QA Chk:
REV:	Drawing Number:		Page: 97

SAMSUNG CONFIDENTIAL
THIS DOCUMENT CONTAINS SAMSUNG ELECTRONICS' PROPRIETARY INFORMATION THAT IS SAMSUNG ELECTRONICS CO'S PROPERTY. DISCLOSURE TO THIRD PARTIES IS PROHIBITED WITHOUT SUCH PARTIES' SIGNED AGREEMENT BY SAMSUNG.

Lassen P +

POP LP4 2G : SEC 1105-002944
POP LP4 3G : SEC 1105-002962

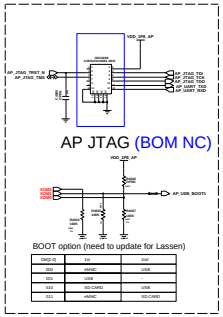

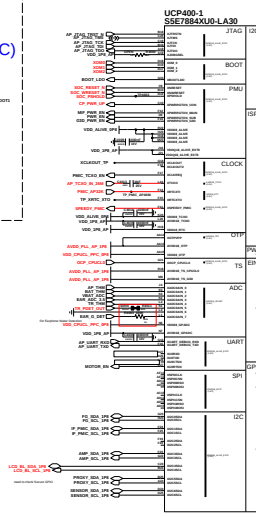

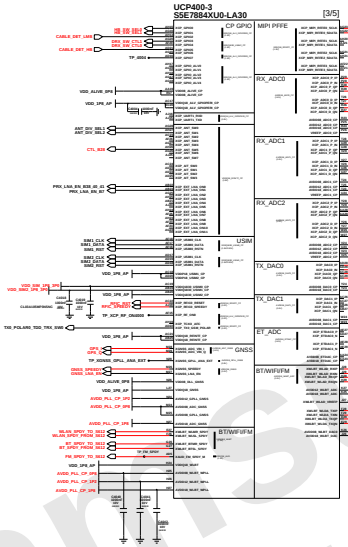

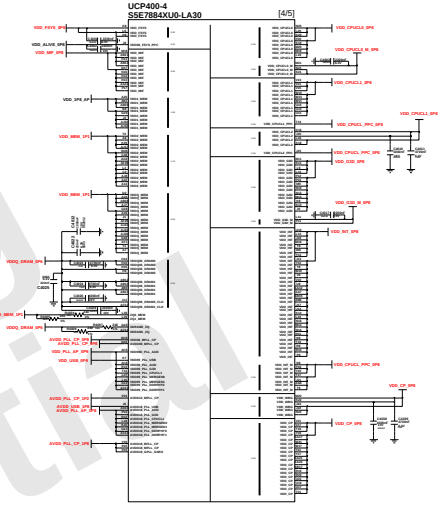

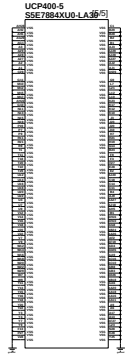

I2C Pull-up Register

XI2C

XISPI2C

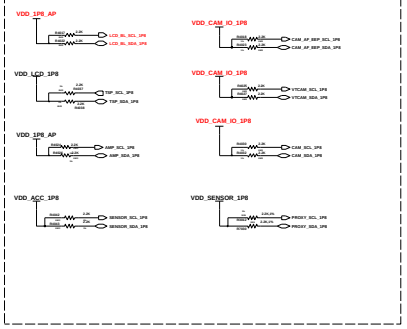

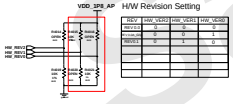

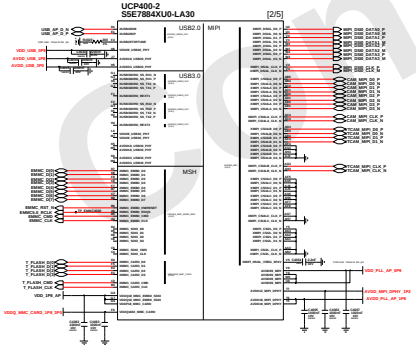

AP Decap

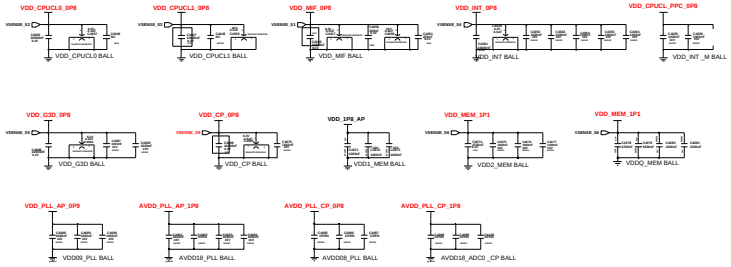

Samsung	AP
Model	SM-A105F

Samsung Confidential

SAMSUNG CONFIDENTIAL
THIS DOCUMENT CONTAINS CONFIDENTIAL
PROPRIETARY INFORMATION THAT IS
SAMSUNG ELECTRONICS CO.'S PROPERTY.
DO NOT COPY, DISTRIBUTE OR DISCLOSE THIS DOCUMENT
EXCEPT AS AUTHORIZED BY SAMSUNG.

POWER

PMIC

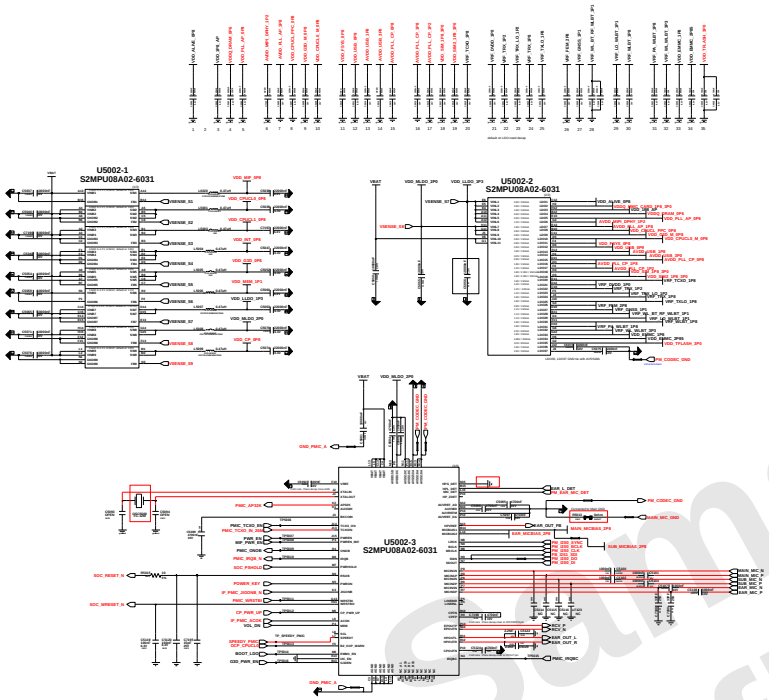

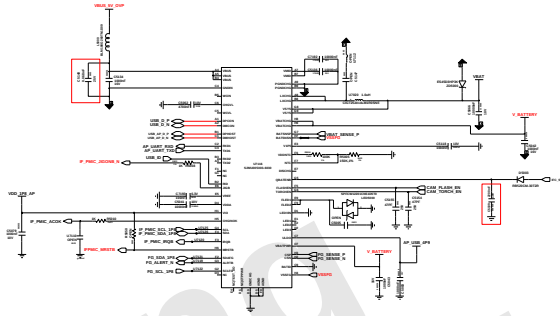

IF PMIC EVT4(CHG+FG+BUCK)

eMMC

16G : SEC (1107-002548)
32G : SEC (1107-002552)

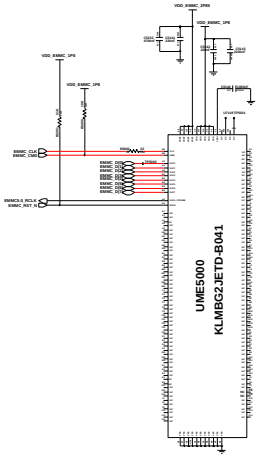

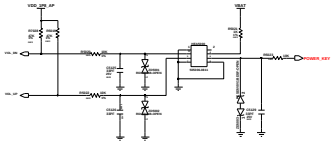

VOLUME KEY POWER KEY

SIM & SD CARD (3IN3)

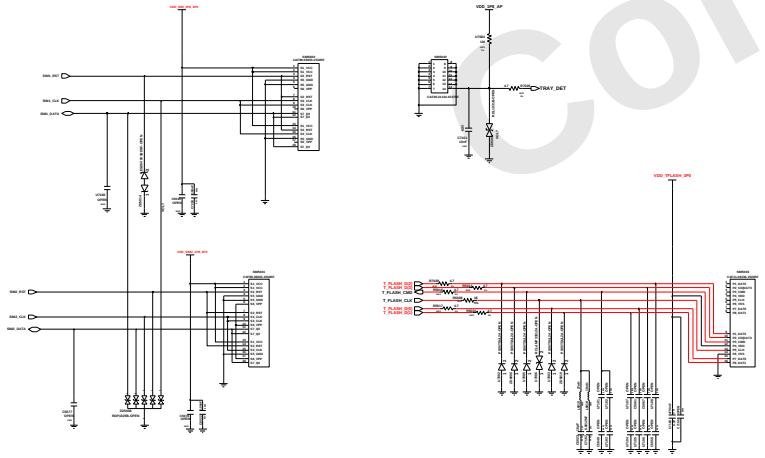

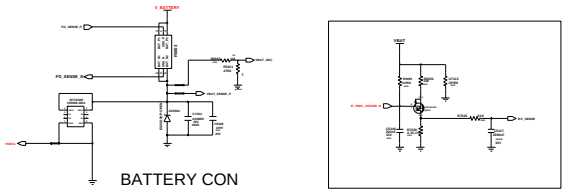

BATTERY CON

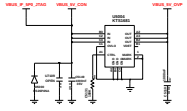

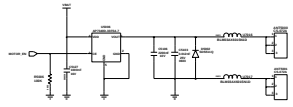

MOTOR

PMIC, eMMC	
SM-A105F	

Samsung Confidential

SAMSUNG CONFIDENTIAL
THIS DOCUMENT CONTAINS CONFIDENTIAL PROPRIETARY INFORMATION THAT IS SAMSUNG ELECTRONICS CO'S PROPERTY. DO NOT DISCLOSE TO OR DUPLICATE FOR OTHERS EXCEPT AS AUTHORIZED BY SAMSUNG.

AUDIO

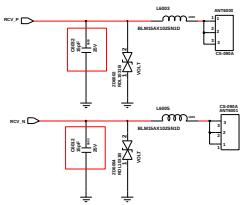

RCV Contact

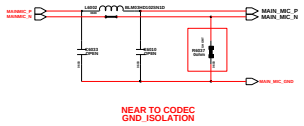

MAIN_MIC

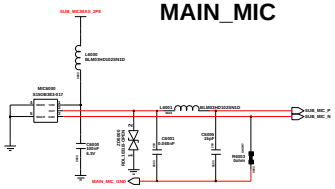

Sub MIC NEAR TO CODEC GND_ISOLATION

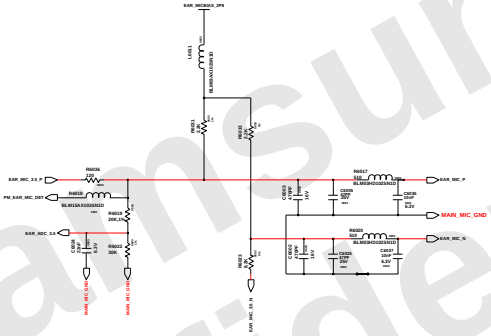

EAR MIC

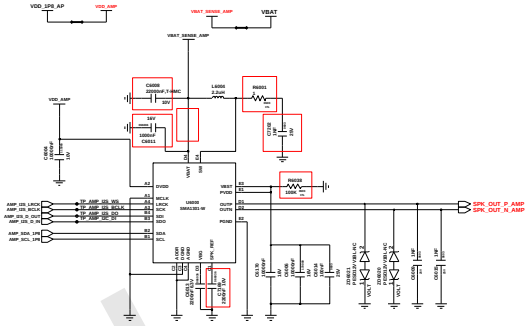

Audio amp

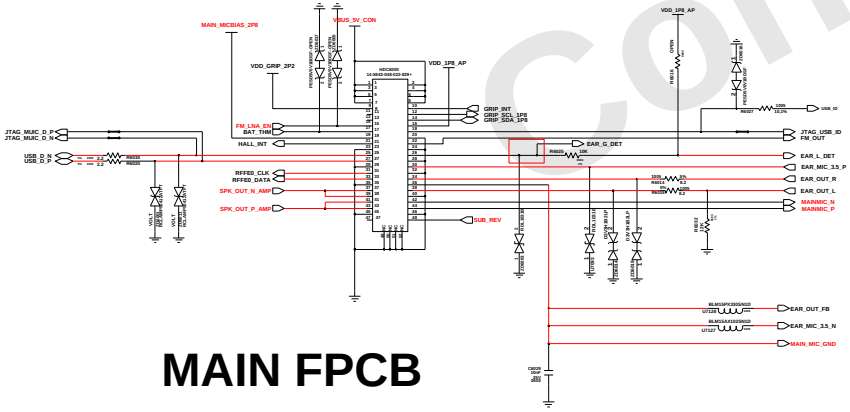

MAIN FPCB

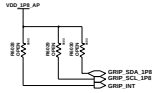

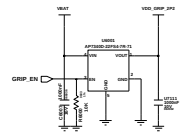

Grip Sensor_LDO

Engineer:	AUDIO		
Drawn by:			
R&D Chk:	TITLE:	SM-A105F	Size: A3
DOC CTRL Chk:			
MFG ENGR Chk:			
Changed by:	Date Changed:	Time Changed:	QA Chk:
REV:	Drawing Number:	Page: 97	

Samsung Confidential

SAMSUNG CONFIDENTIAL
THIS DOCUMENT CONTAINS CONFIDENTIAL AND PROPRIETARY INFORMATION OF SAMSUNG ELECTRONICS CO'S PROPERTY. DO NOT DISCLOSE TO OR DUPLICATE FOR OTHERS EXCEPT AS AUTHORIZED BY SAMSUNG.

CAMERA

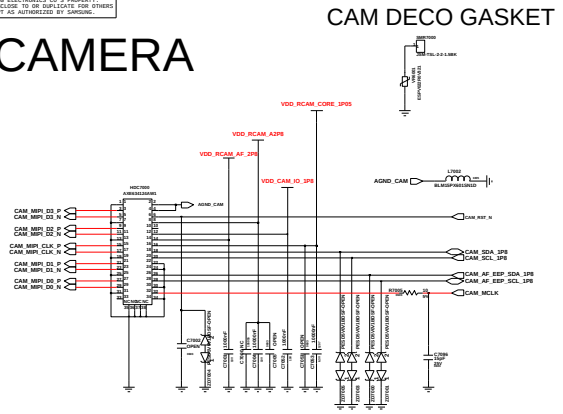

MAIN_CAMERA (13M) : SM-M205F

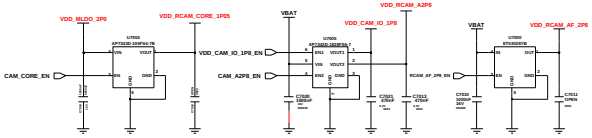

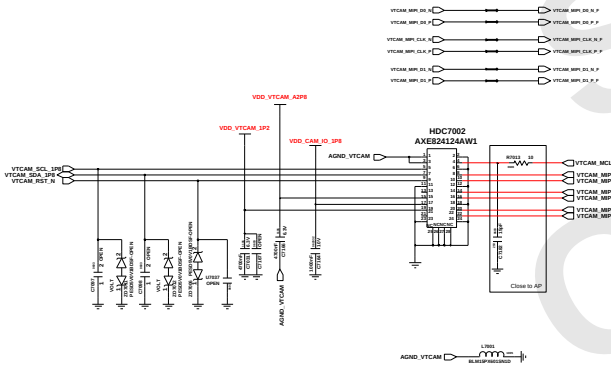

FRONT_CAMERA (5M) : SM-M105F

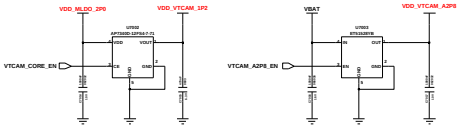

SHIELD CAN

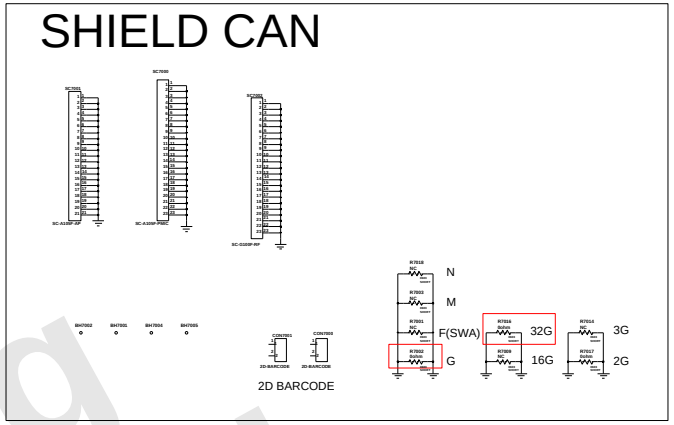

PCB JTAG

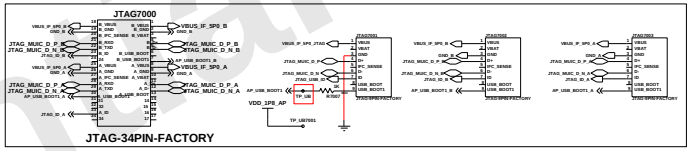

DISPLAY (6.22" INCELL LCD)

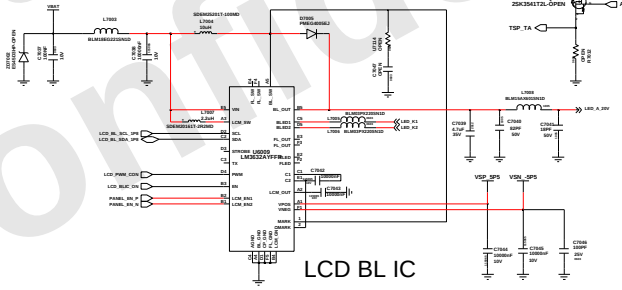

LCD BL IC

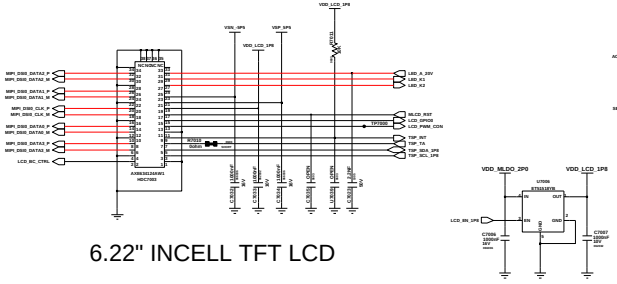

6.22" INCELL TFT LCD

SENSOR

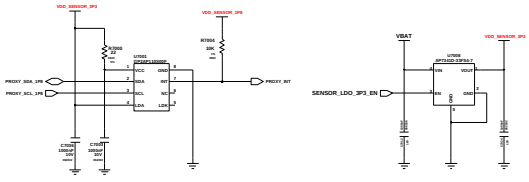

Proxy Sensor

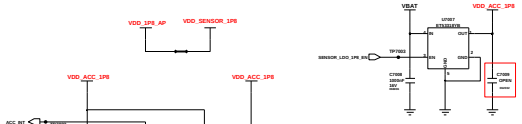

SENSOR LDO

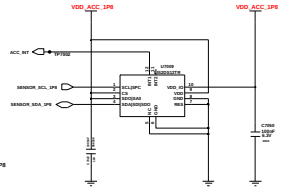

Accel Sensor

Engineer:	CAMERA, DISPLAY,SENSOR
SYSTEM SW:	
HW:	
DOC CTRL CHK:	TITLE: SM-A105F
MFG ENGR CHK:	
QA CHK:	

Samsung Confidential

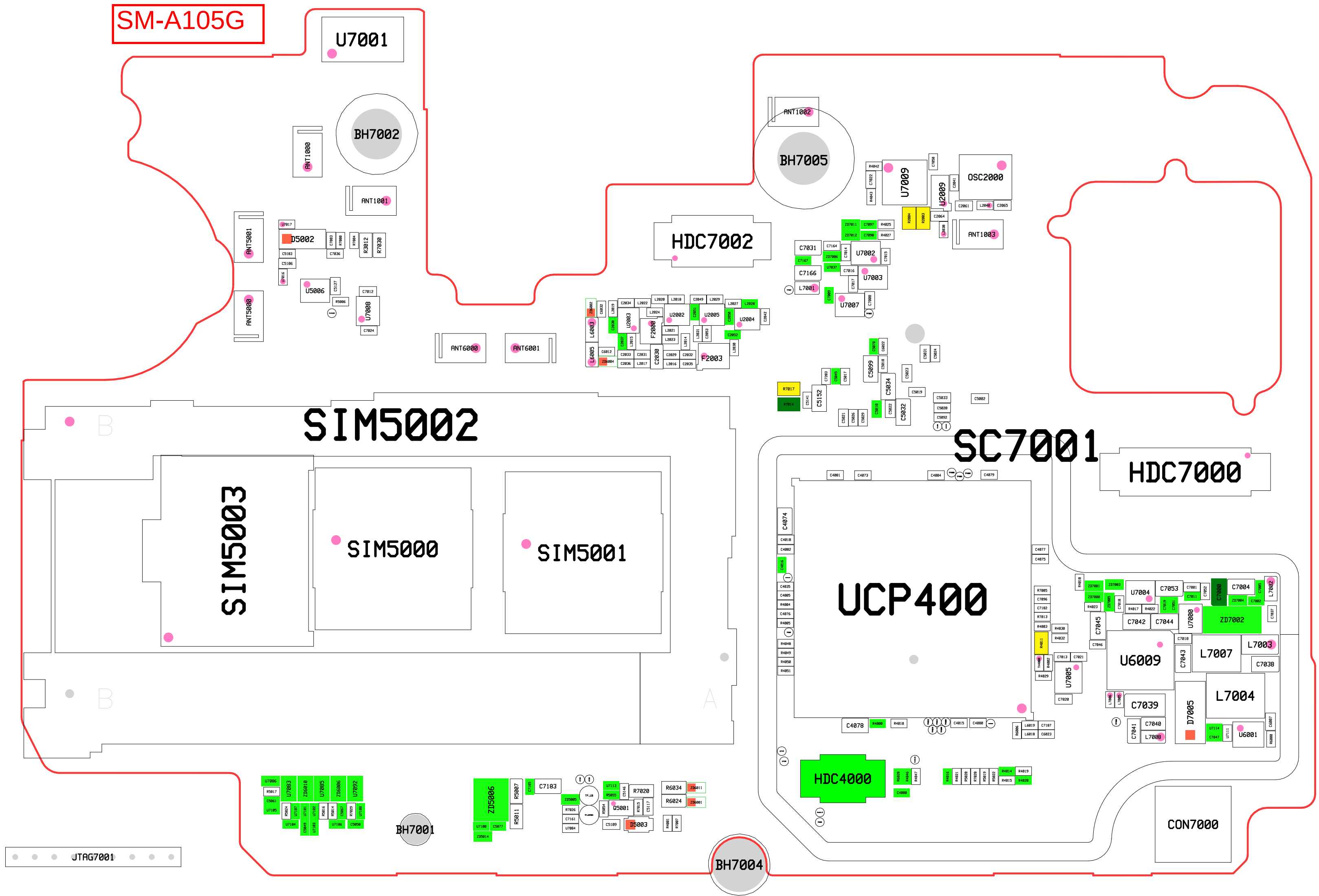
SM-A105G
U7001
BH7002
ANT1000
ANT1001
ANT5001
ANT5000
D5002
U5006
U7008
ANT6000
ANT6001
ANT1002
BH7005
U7009
OSC2000
U2009
ANT1003
HDC7002
C7031
C7166
L7001
U7002
U7003
U7007
U2002
U2005
U2004
U2003
F2000
F2003
C2030
L6003
L6005
C5099
C5034
C5032
C5152
SIM5002
SIM5003
SIM5000
SIM5001
SC7001
HDC7000
UCP400
C4074
C4078
U7004
C7053
C7004
C7000
ZD7002
C7042
C7044
C7045
U7000
U6009
L7007
L7003
C7038
C7043
U7005
C7039
D7005
L7004
C7040
C7041
L7008
U6001
HDC4000
CON7000
BH7004
BH7001
JTAG7001
ZD5006
C7183
R7020
Q5001
D5003
R6034
R6024
R5007
R5011
U7083
ZD5010
U7085
ZD5086
U7092

SM-A105G

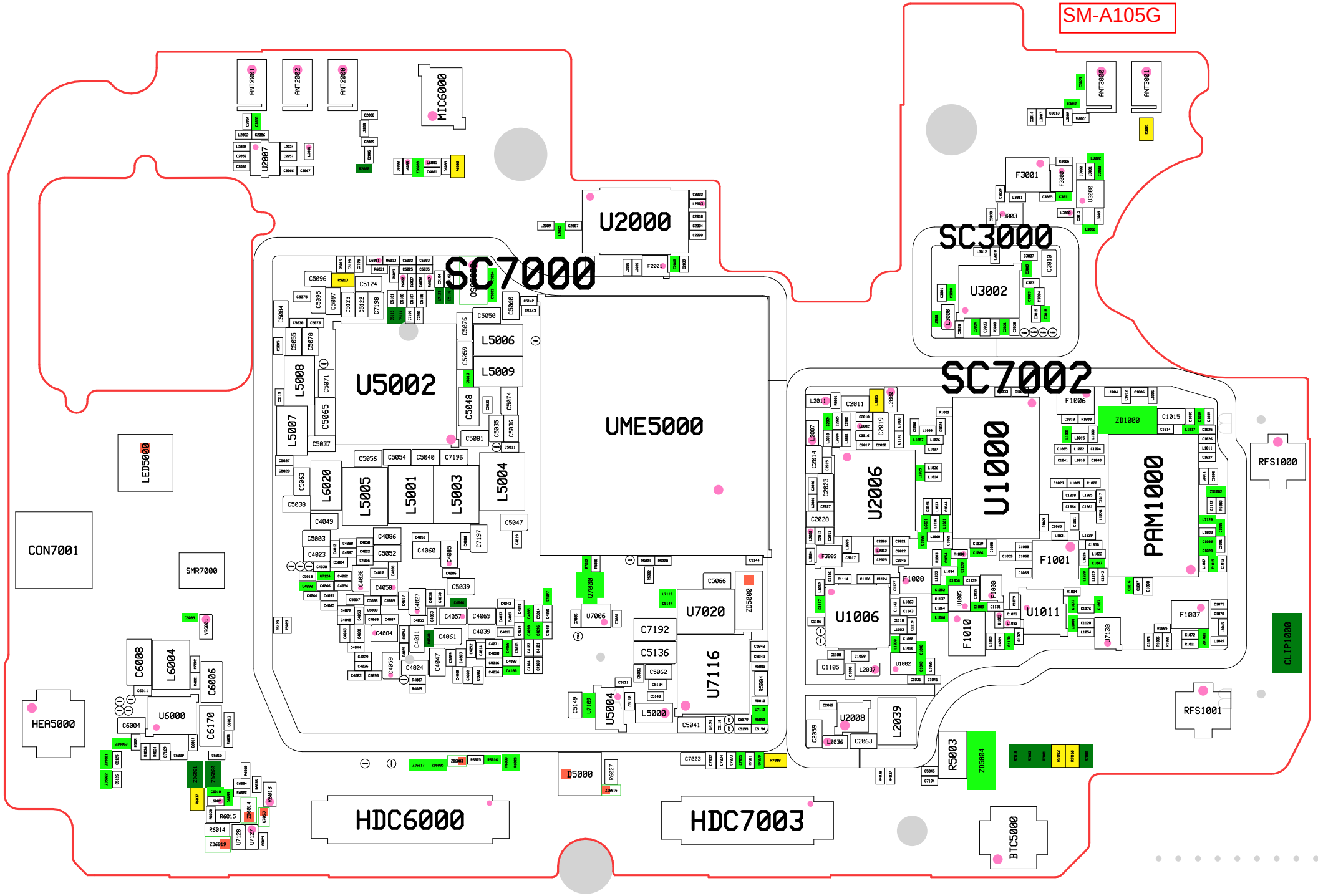
ANT2001
ANT2002
ANT2000
MIC6000
U2007
U2000
SC7000
U5002
UME5000
L5006
L5009
L5008
L5007
L6020
L5005
L5001
L5003
L5004
LED5000
CON7001
SMR7000
HEA5000
C6008
L6004
C6006
U6000
C6004
C6170
HDC6000
HDC7003
U7020
U7116
U7006
U5004
L5000
D5000
ZD5000
ANT3000
ANT3001
F3001
F3003
SC3000
U3002
SC7002
U1000
U2006
PAM1000
ZD1000
F1006
F1001
F1008
F1010
U1006
U1011
F1007
U7130
U2008
L2039
R5003
ZD5004
RFS1000
RFS1001
CLIP1000
BTC5000

SAMSUNG CONFIDENTIAL
THIS DOCUMENT CONTAINS CONFIDENTIAL
AND PROPRIETARY INFORMATION OF
SAMSUNG ELECTRONICS CO'S PROPERTY.
DO NOT DISCLOSE TO OR DUPLICATE FOR OTHERS
EXCEPT AS AUTHORIZED BY SAMSUNG.

SM-A105F REV01

2019.01.29

sheet01 : MAIN RF
sheet02 : TRANCEIVER, DRX, APT
sheet03 : GPS, BT/WIFI, FM
sheet03 : AP
sheet05 : PMIC(Main,IF), eMMC, IF Conn, KEY, MOTOR
sheet06 : Audio, SD/SIM
sheet07 : CAMERA, DISPLAY, SHEILD CAN,SENSOR

Samsung Confidential

SAMSUNG CONFIDENTIAL
THIS DOCUMENT CONTAINS CONFIDENTIAL PROPRIETARY INFORMATION THAT IS SAMSUNG ELECTRONICS CO'S PROPERTY. DO NOT DISCLOSE TO OR DUPLICATE FOR OTHERS EXCEPT AS AUTHORIZED BY SAMSUNG.

RF MAIN

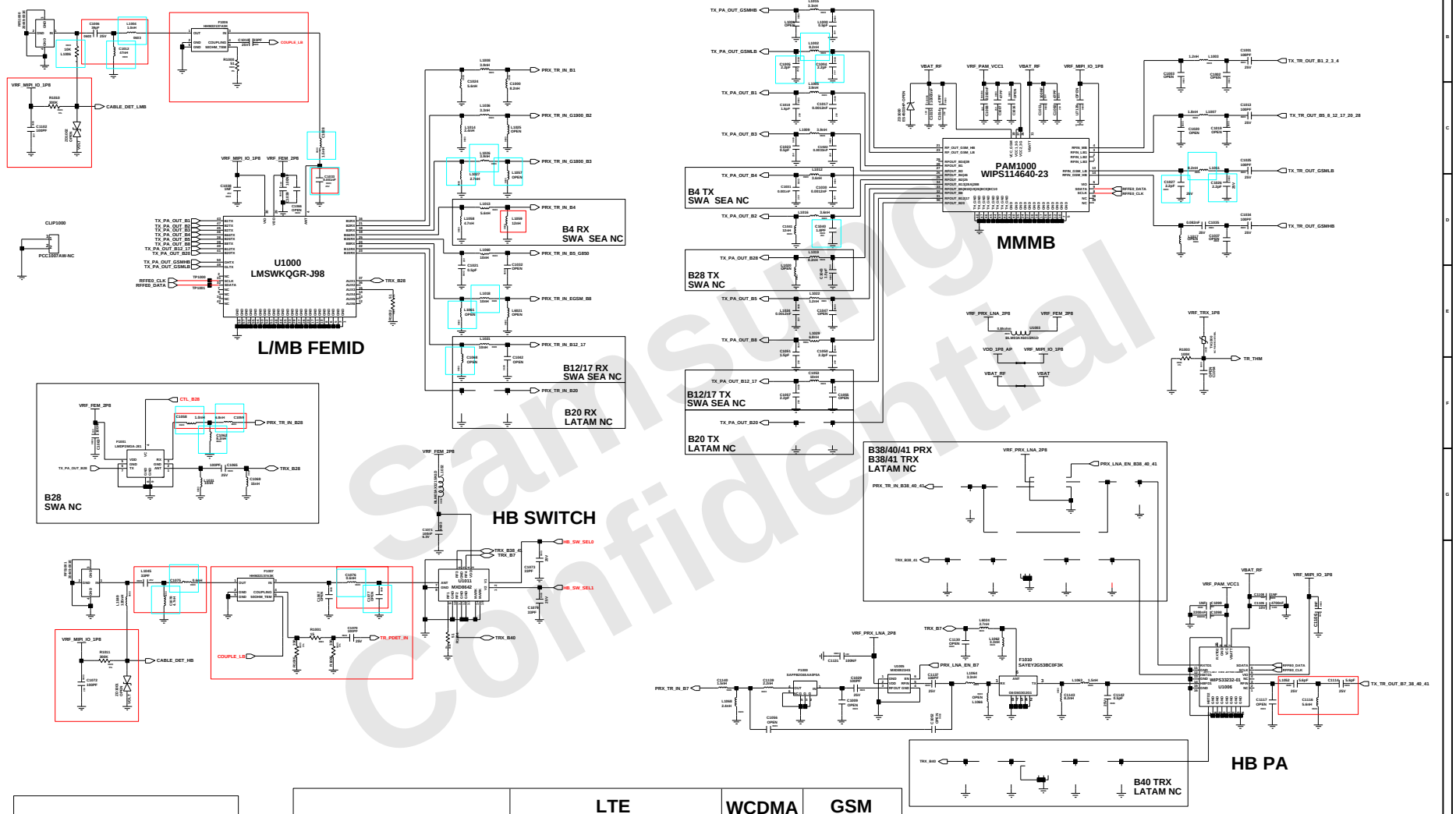

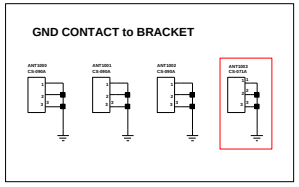

	LTE	WCDMA	GSM
SWA / CIS / MENA / AFR	B1/2/3/5/7/8/20/38/40/41	B1/2/5/8	QUAD
SEA	B1/3/5/7/8/20/28/38/40/41	B1/2/5/8	QUAD
LATAM	B1/2/3/4/5/7/8/12/17/28	B1/2/4/5/8	QUAD
KOR	B1/3/4/5/7/8/17/20/28/38/40/41	B1/2/4/5	QUAD

Engineer	MAIN RF	
Drawn by:		
RED CHK:	TITLE: SM-A105F	Size: A4
DOC CTRL CHK:		
MFG ENGR CHK:		
Changed by:	Date Changed:	Time Changed:
QA CHK:	Drawing Number	1/7

Samsung Confidential

user|swcad71|10.252.50.122|20190222-135443

SAMSUNG CONFIDENTIAL
THIS DOCUMENT CONTAINS CONFIDENTIAL
PROPRIETARY INFORMATION THAT IS
SAMSUNG ELECTRONICS CO'S PROPERTY.
DO NOT DISCLOSE TO OR DUPLICATE FOR OTHERS
EXCEPT AS AUTHORIZED BY SAMSUNG.

DRX

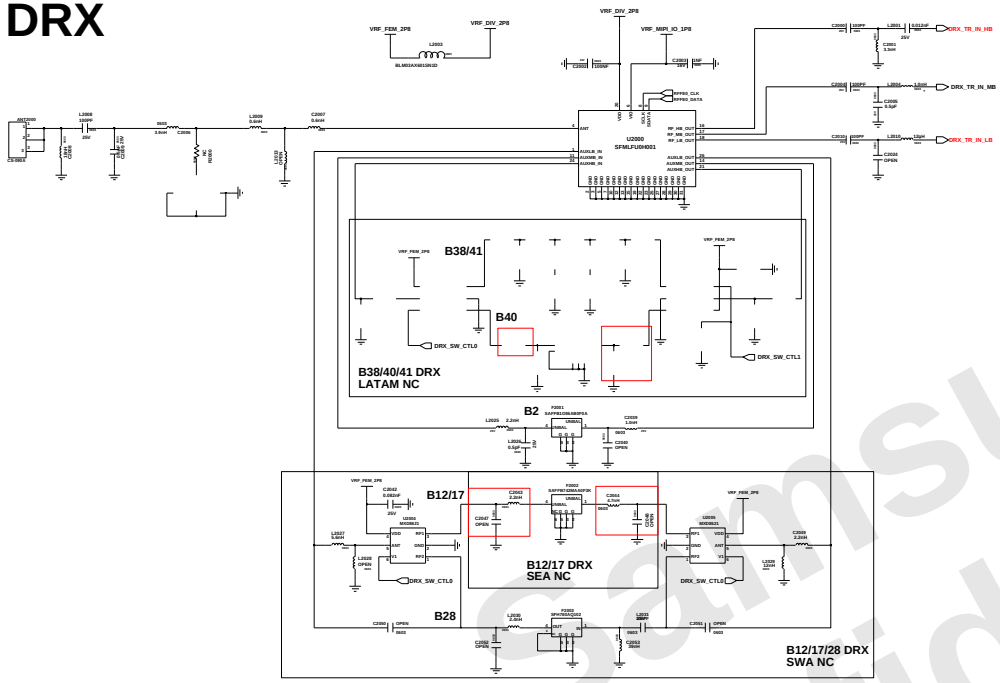

TRANSCEIVER nCA

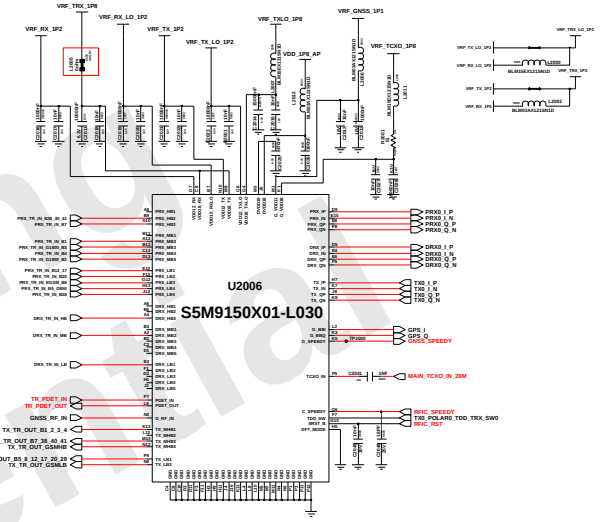

DRX GND SWITCH

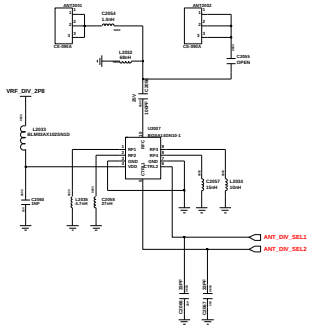

APT MODULATOR

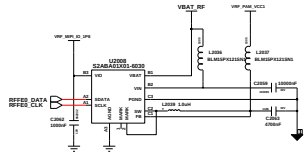

TCXO

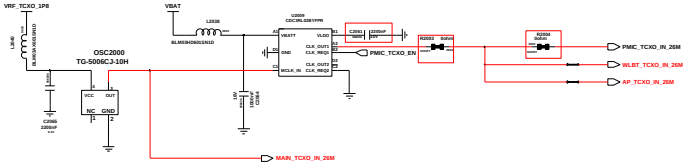

Engineer	DRX, TRANCEIVER
Drawn by:	
Red Chk:	TITLE: SM-A105F
DOC CTRL CHK:	
MFG ENGR CHK:	
Drawing Number	2/7

Samsung Confidential

SAMSUNG CONFIDENTIAL
THIS DOCUMENT CONTAINS CONFIDENTIAL
AND PROPRIETARY INFORMATION OF
SAMSUNG ELECTRONICS CO'S PROPERTY.
DO NOT DISCLOSE TO OR DUPLICATE FOR OTHERS
EXCEPT AS AUTHORIZED BY SAMSUNG.

GNSS

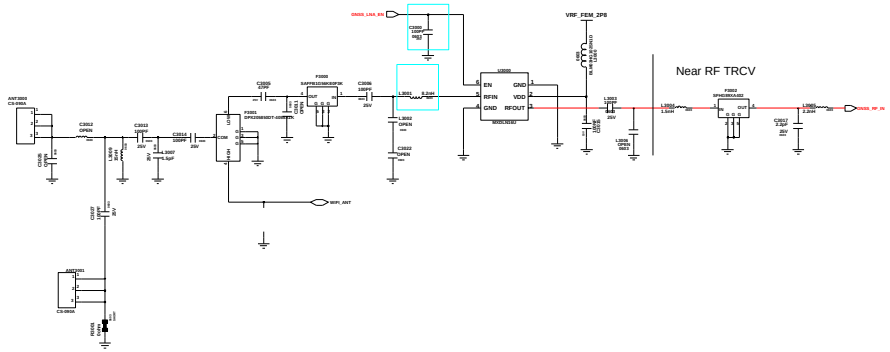

BT/WIFI

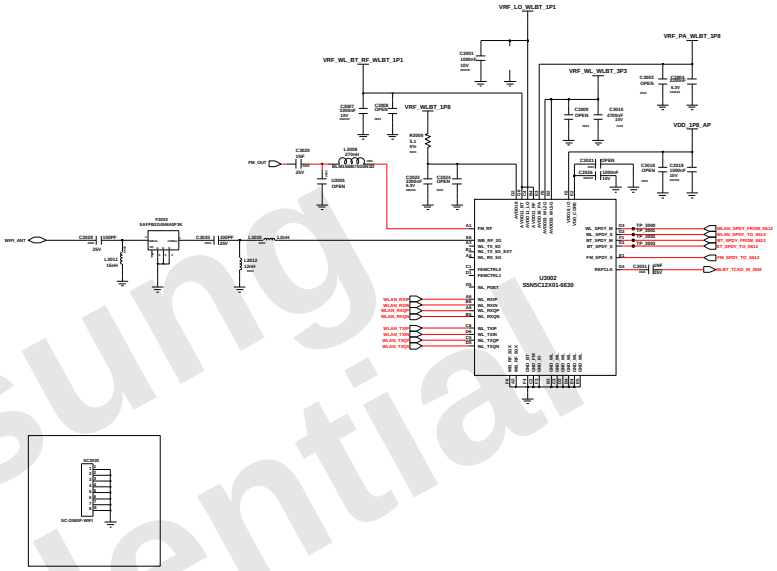

Samsung Confidential

Engineer:	WIFI/BT/GPS
Section Mgr:	
R&D Chk:	TITLE: SM-A105F
DOC CTRL Chk:	SHT A1
MFG ENGR Chk:	
QA Chk:	REV: Drawing Number: PAGE 37

Language for Jobs: Language: Field Language: Field Language:

SAMSUNG CONFIDENTIAL
Unauthorized Use Prohibited. Contains Trade Secrets, Proprietary Information that is Samsung Electronics Co's Property.
Do not disclose to third parties without Samsung Electronics Co's written consent or authorized by Samsung.

Lassen P +

POP LP4 2G : SEC 1105-002944
POP LP4 3G : SEC 1105-002962

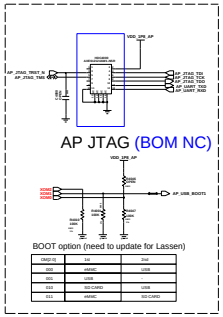

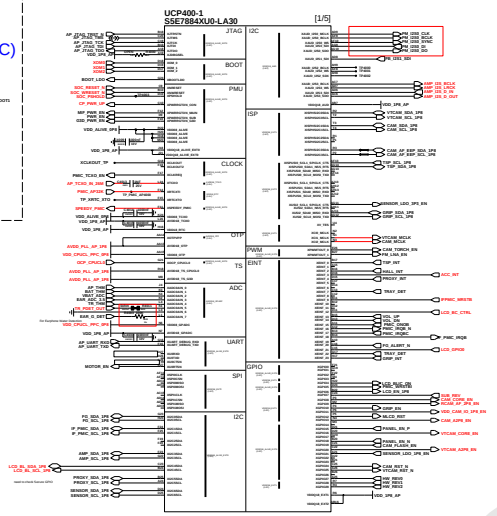

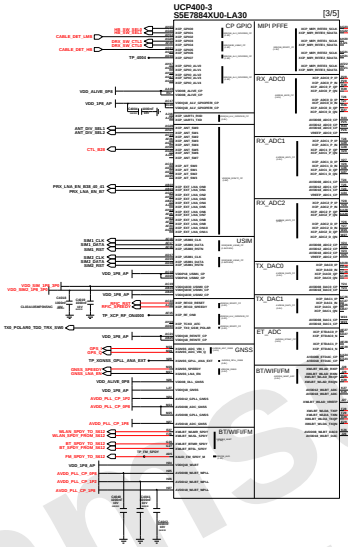

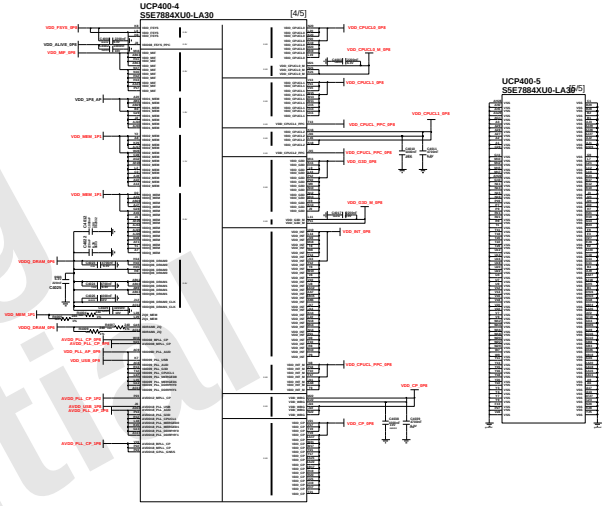

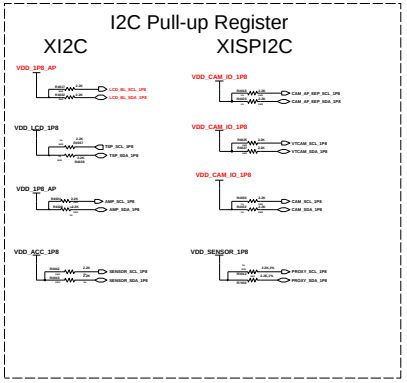

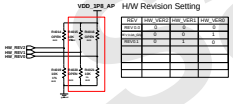

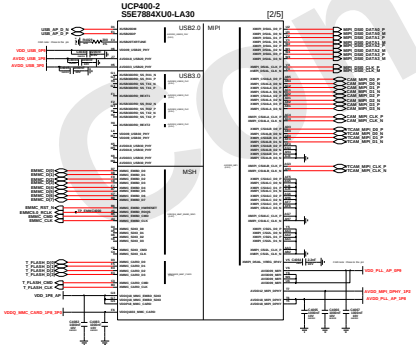

AP Decap

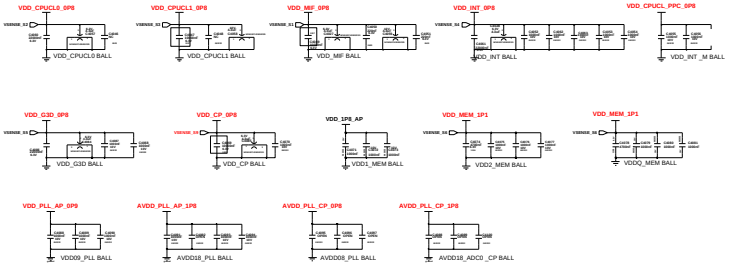

Title	AP
Size	A3
Project	SM-A105F
Rev	1.0

Samsung Confidential

SAMSUNG CONFIDENTIAL
THIS DOCUMENT CONTAINS CONFIDENTIAL
PROPRIETARY INFORMATION THAT IS
SAMSUNG ELECTRONICS CO.'S PROPERTY.
DO NOT DISCLOSE THIS DOCUMENT OR ITS
SUBJECT TO AUTHORIZED BY SAMSUNG.

POWER

PMIC

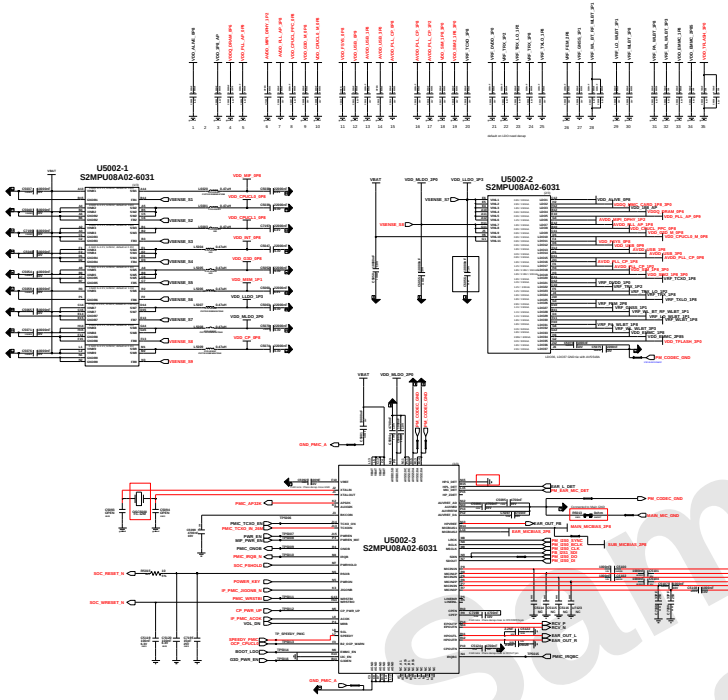

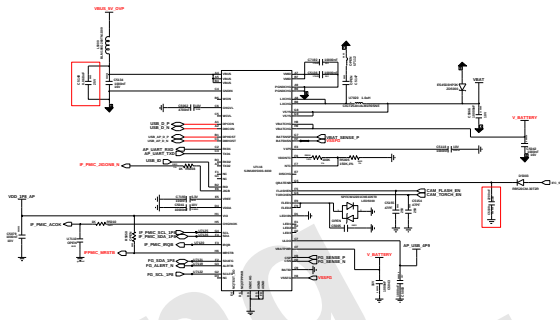

IF PMIC EVT4(CHG+FG+BUCK)

eMMC

16G : SEC (1107-002548)
32G : SEC (1107-002552)

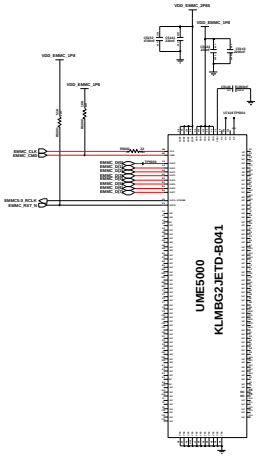

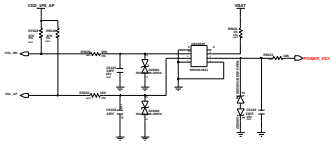

VOLUME KEY POWER KEY

SIM & SD CARD (3IN3)

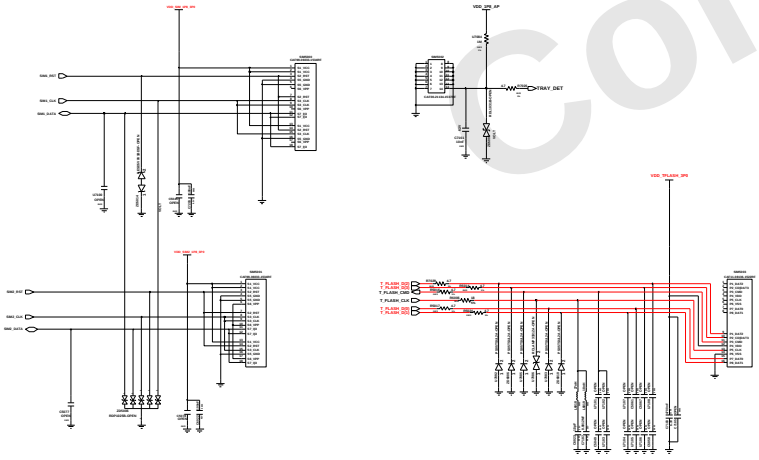

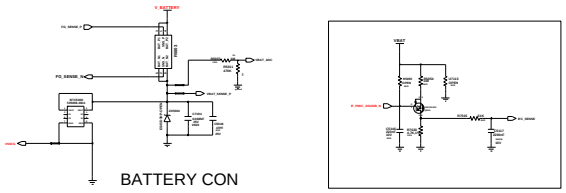

BATTERY CON

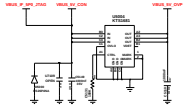

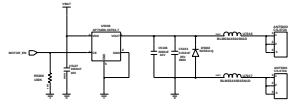

MOTOR

PMIC, eMMC	
SM-A105F	

Samsung Confidential

SAMSUNG CONFIDENTIAL
THIS DOCUMENT CONTAINS CONFIDENTIAL PROPRIETARY INFORMATION THAT IS SAMSUNG ELECTRONICS CO'S PROPERTY. DO NOT DISCLOSE TO OR DUPLICATE FOR OTHERS EXCEPT AS AUTHORIZED BY SAMSUNG.

AUDIO

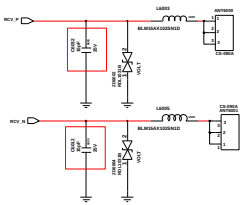

RCV Contact

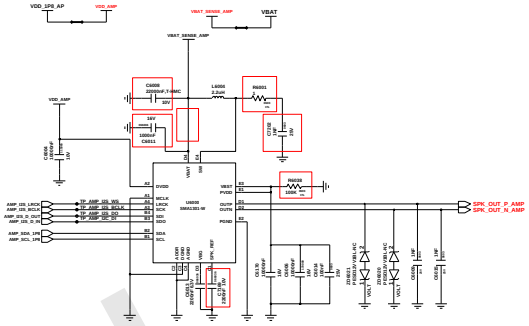

Audio amp

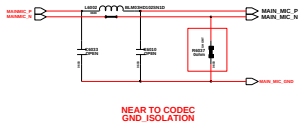

NEAR TO CODEC
GND_ISOLATION

MAIN_MIC

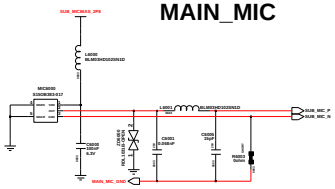

Sub MIC NEAR TO CODEC GND_ISOLATION

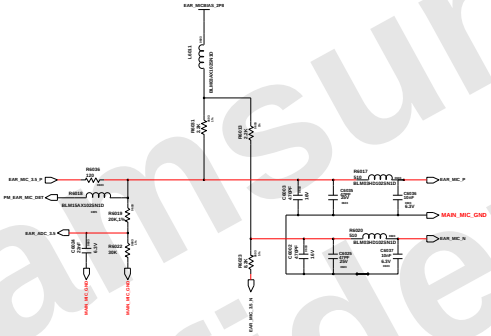

EAR MIC

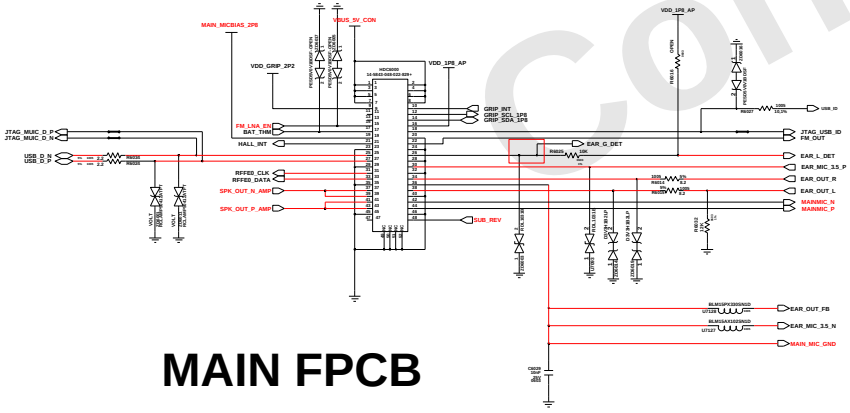

MAIN FPCB

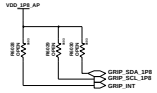

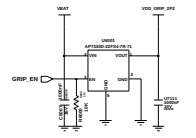

Grip Sensor_LDO

Samsung Confidential

Engineer:		AUDIO	
Drawn by:			
R&D Chk:		TITLE:	Size: A3
DOC CTRL Chk:		SM-A105F	
MFG ENGR Chk:			
Changed by:	Date Changed:	Time Changed:	QA Chk:
REV:	Drawing Number:	Page: 07	

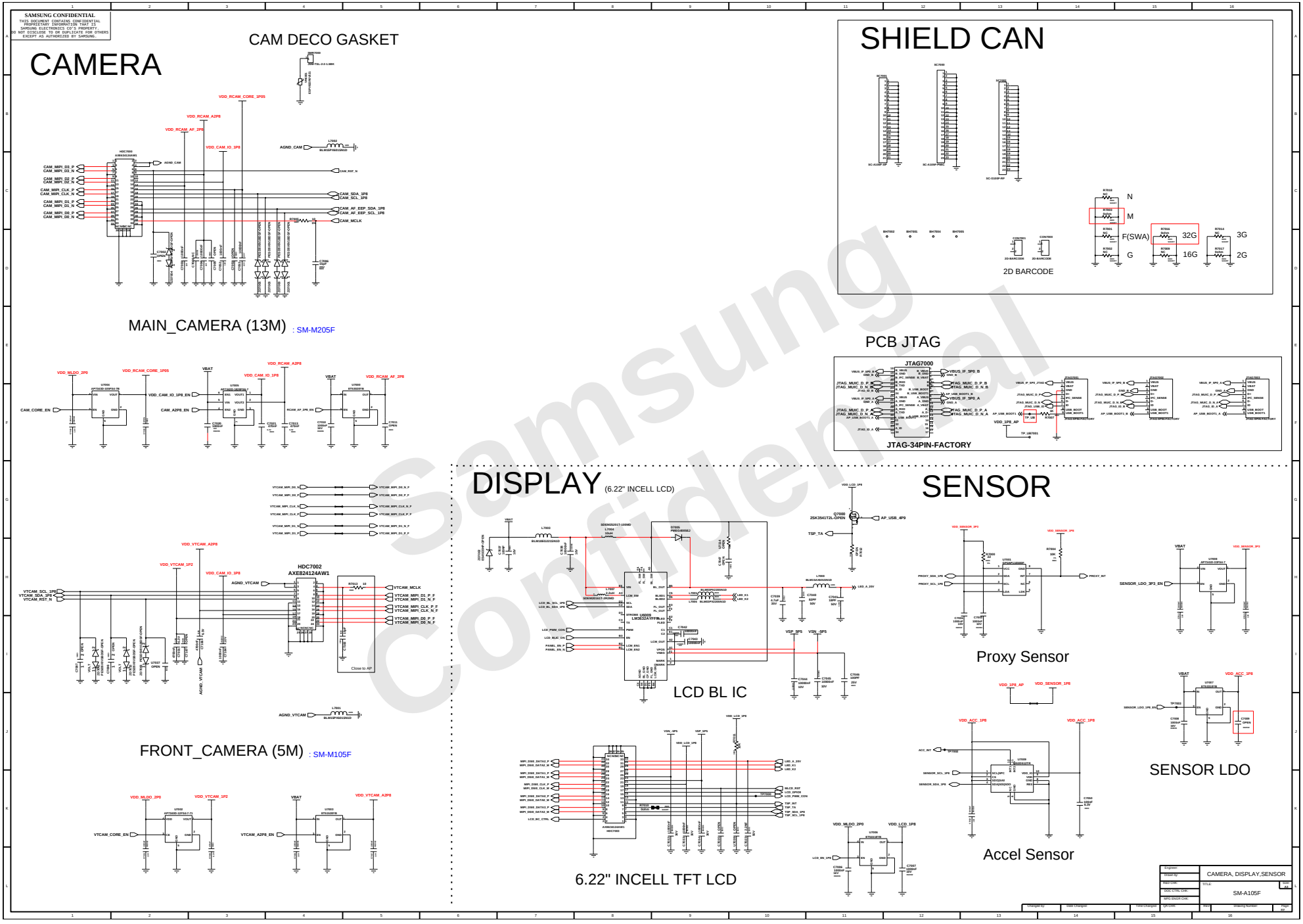
SAMSUNG CONFIDENTIAL
THIS DOCUMENT CONTAINS CONFIDENTIAL
PROPRIETARY INFORMATION THAT IS
SAMSUNG ELECTRONICS CO'S PROPERTY.
DO NOT DISCLOSE TO OR DUPLICATE FOR OTHERS
EXCEPT AS AUTHORIZED BY SAMSUNG.
CAMERA
CAM DECO GASKET
MAIN_CAMERA (13M) : SM-M205F
FRONT_CAMERA (5M) : SM-M105F
SHIELD CAN
2D BARCODE
N
M
F(SWA)
G
32G
16G
3G
2G
PCB JTAG
JTAG7000
JTAG-34PIN-FACTORY
DISPLAY (6.22" INCELL LCD)
LCD BL IC
6.22" INCELL TFT LCD
SENSOR
Proxy Sensor
SENSOR LDO
Accel Sensor
CAMERA, DISPLAY,SENSOR
SM-A105F
Samsung Confidential

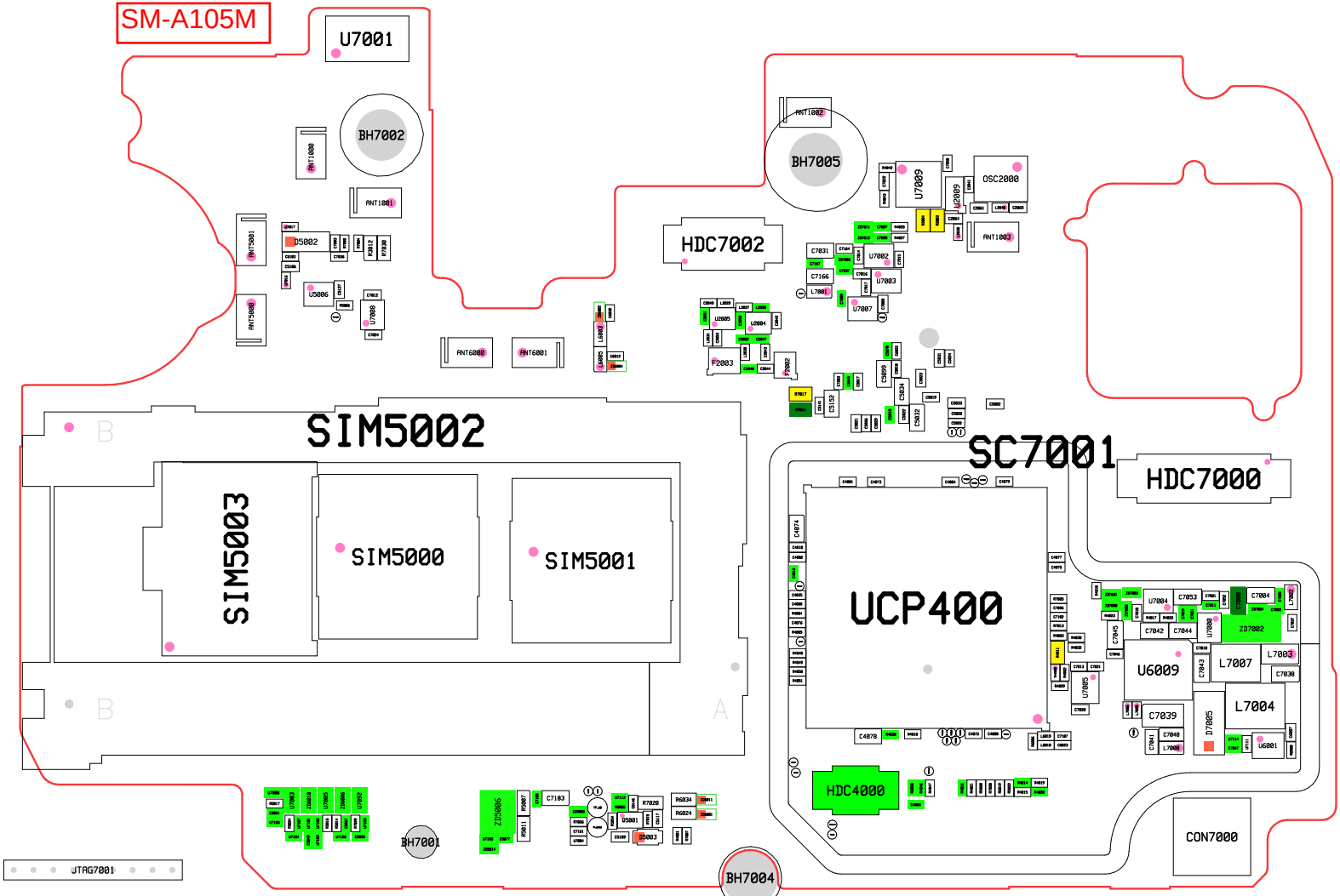
SM-A105M
U7001
BH7002
ANT1000
ANT1001
ANT5001
D5002
R2012
R7030
U5006
U7008
ANT5000
ANT6000
ANT6001
L6003
L6005
ANT1002
BH7005
U7009
U2009
OSC2000
ANT1003
HDC7002
C7031
C7166
L7001
U7002
U7003
U7007
U2005
U2004
F2003
F2002
C5899
C5152
C5034
C5032
SIM5002
SIM5003
SIM5000
SIM5001
SC7001
HDC7000
UCP400
C4074
C4078
U7004
C7053
C7004
L7002
C7042
C7044
U7000
ZD7002
C7045
U6009
L7007
L7003
C7043
C7038
U7005
C7039
L7004
D7005
C7048
C7041
L7008
U6001
HDC4000
CON7000
ZD5006
R5007
R5011
C7103
R7020
R6034
R6024
Q5001
D5003
BH7001
BH7004
JTAG7001

SM-A105M

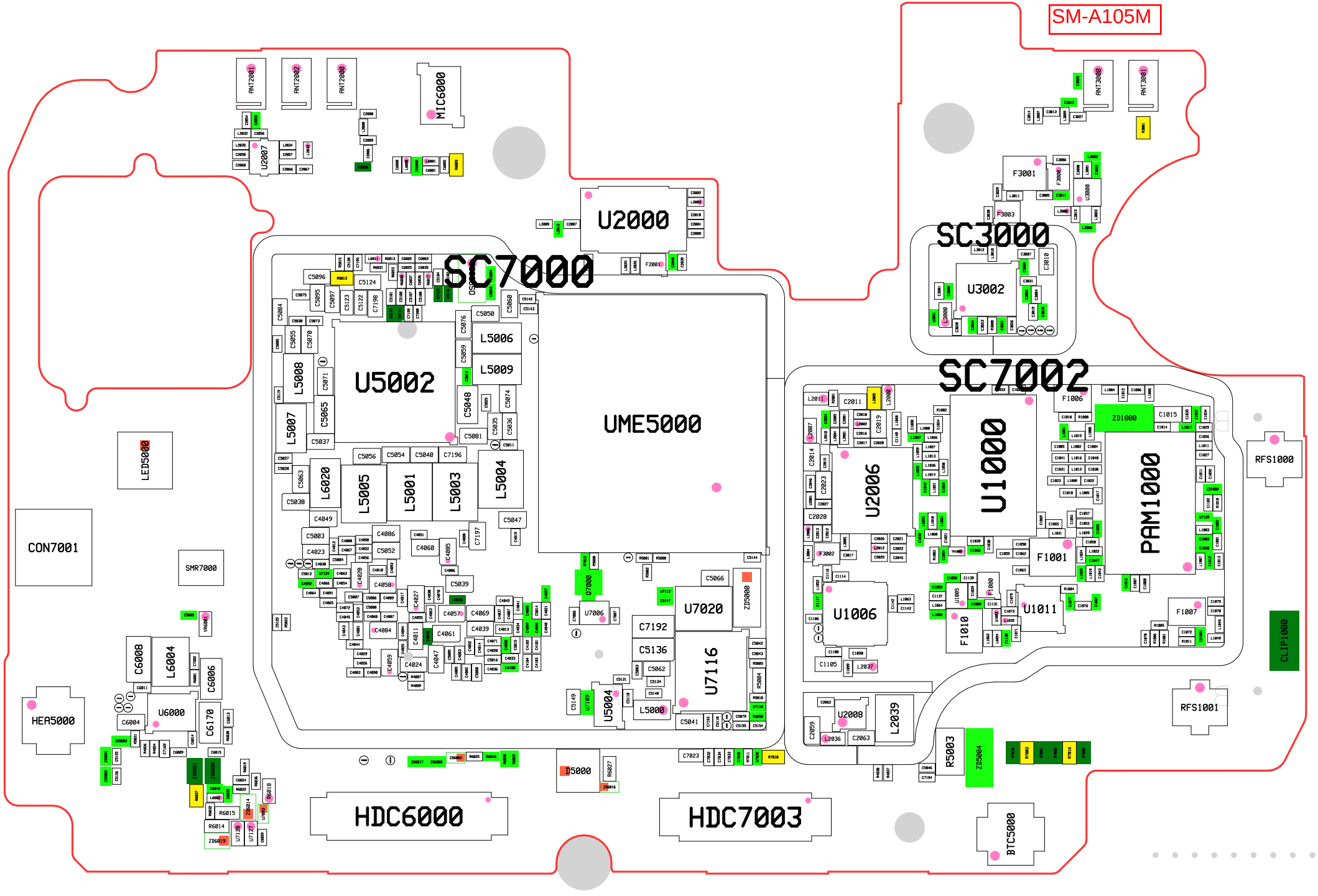
ANT2001
ANT2002
ANT2000
MIC6000
U2007
U2000
SC7000
U5002
UME5000
L5006
L5009
L5008
L5007
C5065
L6020
L5005
L5001
L5003
L5004
LED5000
CON7001
SMR7000
HEA5000
C6008
L6004
C6006
U6000
C6170
U7020
U7116
U5004
L5000
ZD5000
HDC6000
HDC7003
SC3000
U3002
F3001
F3003
SC7002
U1000
U2006
U1006
U1011
PAM1000
ZD1000
F1001
F1010
F1007
RFS1000
RFS1001
CLIP1000
U2008
L2039
R5003
ZD5004
BTC5000